HUSSMANN®

Insight®

EVOLVE® technologies compatible

Technical Datasheet

ID5NM

Open Multideck Medium Temperature Display Case

Applications
Beverage, Dairy, Deli, Produce, and Meat

P/N 0541505 **Rev** M
April 2026

Models Covered
ID5NM4, ID5NM6, ID5NM8, ID5NM12

Refrigerant(s)
A2L (R-454A or R-454C)
R-744 (CO_2)
Glycol
HFC/HCFC/HFO

Certifications

ETL LISTED C US Intertek

NSF®

NSF/Sanitation Compliance
This merchandiser model is manufactured to meet NSF/ANSI Standard 7 requirements for construction, materials, and cleanability.

Table of Contents

Model Name	2
Performance Data	3
Refrigerant Data	4
Cross-section View	5
Plan View	6
Electrical Specifications	7
Additional Data	8
Wiring Diagrams	9

⚠ ***WARNING***
Component parts shall be replaced with like components, and servicing shall be done by factory authorized service personnel only, so as to minimize the risk of possible ignition due to incorrect parts or improper service.

We reserve the right to change or revise specifications and product design in connection with any feature of our products. Such changes do not entitle the buyer to corresponding changes, improvements, additions, or replacements for equipment previously sold or shipped.

©2026 HUSSMANN CORPORATION • BRIDGETON, MO 63044-2483 U.S.A.
U.S. & CANADA 1-800-922-1919 • MEXICO 800-890-2900 • WWW.HUSSMANN.COM

Spanish P/N 0541506
French P/N 3250573

WARNING:
Read the entire installation, operation, and service manual before installing, servicing, or using this equipment in any way. Refer to the manual for detailed information about minimum room floor area and installation, maintenance, and service processes.

A2L Equipped Models

If the information in the instructions are not followed exactly, a fire or explosion may result, causing property damage, personal injury, or death. Installation and service must be performed by a qualified installer or service agency.

Mildly flammable A2L refrigerant used. Units that are configured to use A2L refrigerants require special attention. No open flames, cigarettes, or other possible sources of ignition should be used inside or in the vicinity of units containing flammable refrigerants.

If a refrigerant leak is present or even suspected, do not allow untrained personnel to attempt to find the cause. No open flames, cigarettes, or other possible sources of ignition should be used inside or in the vicinity of the unit(s). Intrinsically safe components are the only types that can be worked on while live in the presence of a flammable atmosphere.

Information on pre-installed A2L refrigerant sensors and detectors, safety shut-off and check valves, relay information, and additional parts replacement information can be found in the associated installation, operation, and service manual. All manual information must be reviewed in full prior to performing any work.

R-744 (CO_2) Equipped Models

This equipment uses carbon dioxide (R-744 [CO_2]) refrigerant for heat transfer. The system is sealed and pressure-tested with ASME-certified vessels, but leaks can occur in the event of a system failure. A CO_2 leak in an unventilated space can pose serious hazards. Therefore, units must be installed in areas with adequate ventilation and in accordance with local safety codes.

A leak of R-744 could result in a concentration exceeding the practical limit in an enclosed, occupied space such as a cold room. Precautions must be taken to prevent asphyxiation. These include the use of permanent leak detection, which activates an alarm in the event of a leak.

Observe all warnings and labels on the unit being installed or serviced such as the one below indicating high pressure.

All refrigeration servicing must be completed by a certified refrigeration installation professional, and all tubing and components MUST be qualified for CO_2 applications, with a minimum design pressure of 1,305 psig (90 bar).

Failure to abide by all warnings contained within the associated manual could result in an explosion, death, injury, and property damage.

Model Nomenclature

“ID5NM” is followed by a number representing the length of the case in feet (i.e., a 12-foot model would be “ID5NM12”).

Ordering Information

All options must be selected at time of ordering. Some lengths and/or applications require optional fan motor kits applied by the Hussmann Product Configurator (HPC).

Refrigeration Data [1]

ID5NM		Optimal Shelf Life				Energy Comparison
Application		Dairy/Deli/ Beverage/ Produce	Convertible/ Meat	NSF Type 2 Ambient[4]	Pegs[5]	AHRI 1200 Rating Point[6]
Unlit Shelves	Discharge Air °F (°C)	33 (0.55)	31 (-0.55)	30 (-1.11)	32 (0)	34 (1.11)
	Average Evaporator °F (°C) [2, 3]	28 (-2.22)	27 (-2.77)	26 (-3.33)	26 (-3.33)	30 (-1.11)
	Parallel Btu/hr/ft (Watts/m) [6]	1055 (1015)	1110 (1068)	1320 (1269)	1375 (1323)	1020 (981)
	Conventional Btu/hr/ft (Watts/m) [6]	1150 (1106)	1210 (1164)	1440 (1385)	1500 (1443)	1110 (1068)
Lit Shelves	Discharge Air °F (°C)	31 (-0.55)	30 (-1.11)	29 (-1.66)	N/A	33 (0.55)
	Average Evaporator °F (°C) [2]	27 (-2.77)	26 (-3.33)	25 (-3.88)	N/A	29 (-1.66)
	Parallel Btu/hr/ft (Watts/m) [7, 8]	1070 (1029)	1130 (1087)	1345 (1293)	N/A	1030 (991)
	Conventional Btu/hr/ft (Watts/m) [7, 8]	1165 (1121)	1230 (1183)	1465 (1409)	N/A	1125 (1082)
Fan Speed[9]	ID5NM6 (8.25”)	1400[9]	1600[9]	1600[9]	1400[9]	1400[9]
	ID5NM4, 8, 12 (8.25”)	1400[9]	1600[9]	1600[9]	1400[9]	1400[9]

Notes:
1. All data based on store temperature and humidity that does not exceed NSF Type 1 ambient conditions of 75°F and 55% relative humidity except where noted.
2. Average evaporator temperature shown. Use dew point for high glide refrigerants for unit sizing. Care should be taken to use the dew point in PT tables for measuring and adjusting superheat. Adjust evaporator pressure as needed to maintain discharge air temperature shown.
3. For DX CO_2 applications the average evaporator temperature may be lowered by 2°F but not more than 5°F. An EPR valve should be used if the system suction temperature is more than 5 degrees below the published case evaporator temperature. A 31°F flash tank temperature with a 24°F evaporator temperature is used when sizing default EEV selections to provide a minimum pressure drop across the valve of approximately 50 psig. For operating conditions that provide a pressure drop across the valve above 65 psig or below 35 psig, the electronic expansion valve size should be determined using the valve vendor sizing program and selected from the pull down list in the Hussmann Product Configurator (HPC).
4. Data for operation in NSF Type 2 ambient of 80°F and 55% relative humidity.
5. Hussmann Peg Shelves for Dairy/Deli applications only.
6. AHRI 1200 Rating Point for energy consumption comparison only.
7. Subtract 60 Btu/hr/ft (57.7 Watts/m) for front glass (on applicable models).
8. Add 10 Btu/hr/ft (9.6 Watts/m) per shelf row for LED shelf light fixtures.
9. Some lengths and/or applications require optional fan motor kits applied by the Hussmann Product Configurator (HPC).

Defrost Data

Frequency (hours between defrost) 4

Defrost Water [10] 8.2 lb/ft/day (12.2 kg/m)

[10] **(± 15%** based on case configuration and product loading).

Offtime	ID5NM
Time (minutes)	20
Electric or Gas	Not Available

Conventional Controls

ID5NM

Low Pressure Backup Control CI/CO [11]
20°F /10°F
–6.7°C / –12.2°C

Indoor Unit Only, Pressure Defrost Termination [11]
48°F (8.9°C)

[11] Use a Temperature Pressure Chart to determine PSIG conversions.

Product Data

Gross Refrigerated Volume [13] ***(Cu Ft/Ft)***	9.6 ft^3/ft (0.89 m^3/m)
AHRI Total Display Area [14] **(*Sq Ft/Ft)***	4.27 ft^2/ft (1.30 m^2/m)
Shelf Area [15] ***(Sq Ft/Ft)***	8.11 ft^2/ft (2.47 m^2/m)

[12] AHRI Gross Refrigerated Volume: Refrigerated Volume/Unit of Length, ft^3/ft [m^3/m]
[13] Computed using AHRI 1200 standard methodology: Total Display Area, ft^2 [m^2]/Unit of Length, ft [m]
[14] Shelf surface area is composed of bottom deck plus standard shelf complement for this model: (4) rows of 18-in. shelves

Refrigerant Data

Approximate HFC/HCFC/HFO Refrigerant Charge[15]

Case	Estimated Charge
ID5NM4	9.6 oz (272 g)
ID5NM6	17.6 oz (499 g)
ID5NM8	24 oz (680 g)
ID5NM12	46.4 oz (1,315 g)

A2L Refrigerant Charge

Model	Minimum Room Floor Area ft^2 (m^2)	Estimated Refrigerant Charge — lb (g)	
		Operating Charge	
		R-454A	R-454C
ID5NM4	106 (9.8)	1.4 (657)	1.4 (657)
ID5NM6	106 (9.8)	1.9 (877)	2 (887)
ID5NM8	196 (18.2)	2.5 (1,125)	2.5 (1,137)
ID5NM12	196 (18.2)	3.6 (1,643)	3.7 (1,660)

R-744 (CO_2) Pressure Rating

Case Configuration	Pressure Rating
standard pressure CO_2	652 psi (45 bar)
high pressure CO_2	1,305 psi (90 bar)

Glycol Heat Transfer Fluid Data (Dairy)

Model	Coil Inlet Temperature ° F (° C)	Coil Temp. Rise ° F (° C)	Average Coil Temperature ° F (° C)	Flow Rate GPM (LPM)	Pressure Drop PSI (bar)
ID5NM4	25 (-3.9)	4 (2.2)	27 (-2.8)	2.6 (9.8)	6.7 (0.5)
	20 (-6.7)	14 (7.8)	27 (-2.8)	0.7 (2.6)	1.4 (0.1)
ID5NM6	25 (-3.9)	4 (2.2)	27 (-2.8)	3.8 (14.4)	4.7 (0.3)
	20 (-6.7)	14 (7.8)	27 (-2.8)	1.0 (3.8)	0.9 (0.1)
ID5NM8	25 (-3.9)	4 (2.2)	27 (-2.8)	5.0 (18.9)	8.0 (0.6)
	20 (-6.7)	14 (7.8)	27 (-2.8)	1.5 (5.7)	1.8 (0.1)
ID5NM12	25 (-3.9)	4 (2.2)	27 (-2.8)	7.6 (28.8)	8.3 (0.6)
	20 (-6.7)	14 (7.8)	27 (-2.8)	2.2 (8.3)	2.0 (0.1)

[15] This is an average for all refrigerant types. Actual refrigerant charge may vary by approximately half a pound.

Open Multideck Medium Temperature Display Case
Narrow Bottom, Medium Height Front

***Insight* ID5NM**
Dairy / Delicatessen / Meat

DOE 2017
Energy Efficiency Compliant

Hussmann refrigerated merchandisers configured for sale for use in the United States meet or surpass the requirements of the DOE 2017 energy efficiency standards.

Shelf complement shown as tested:

Four rows of 18-in. shelves spaced equally between bottom display pan and interior top panel.

Other optional kits (top piping and vent fans) add to the overall case height.

A minimum 1 1/2-in. clearance required to remove raceway cover, 6 1/2-in. for full access. See the Installation manual for instructions.

3-in. between back to back cases.

Shown with Ellipse Option Canopy and Bumper.

OPTIONAL RAIL LIGHT

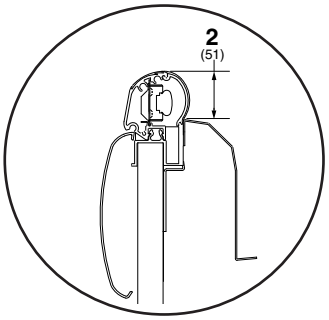

Rail light cannot be used with glass front option.

OPTIONAL GLASS FRONT

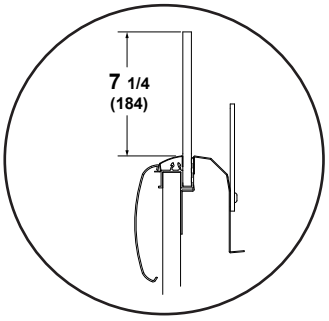

Glass front cannot be used with rail light option.

Dimensions shown as in. and (mm).

ID5NM

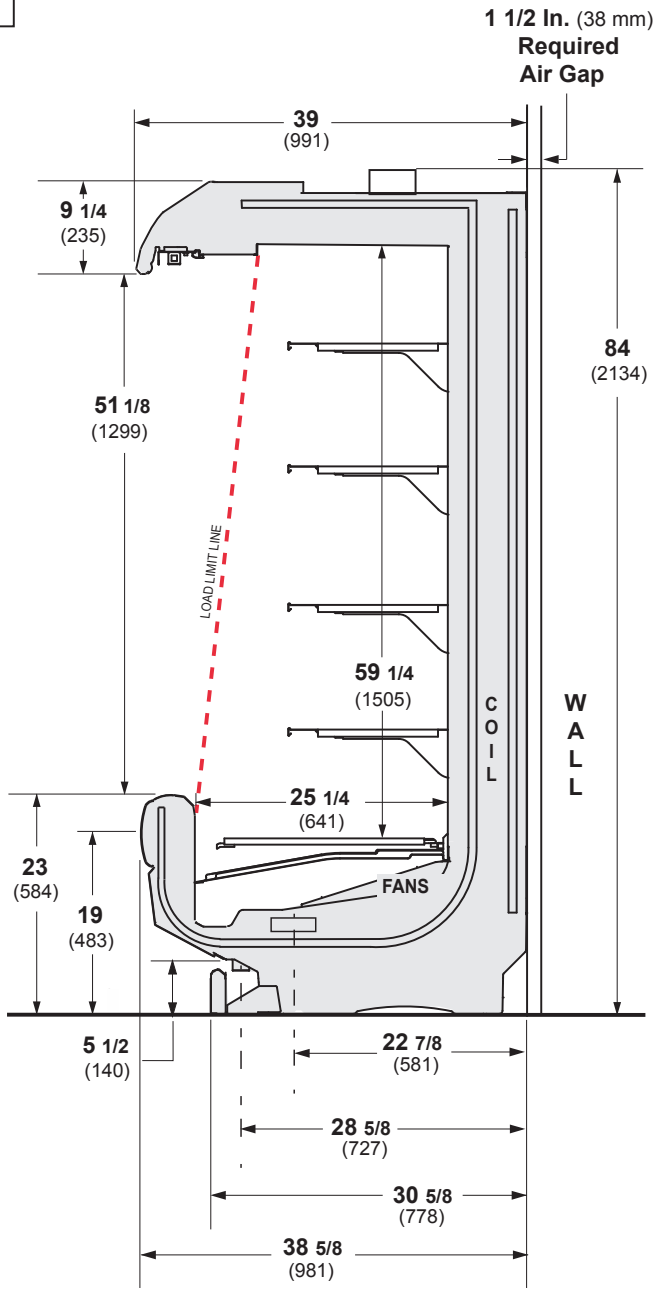

NSF Certification

This merchandiser model is manufactured to meet NSF/ANSI (National Sanitation Foundation) Standard #7 requirements for construction, materials and cleanability.

Plan View

ID5NL/ID5NM
ID6NL

Dimensions shown as in. and (mm).

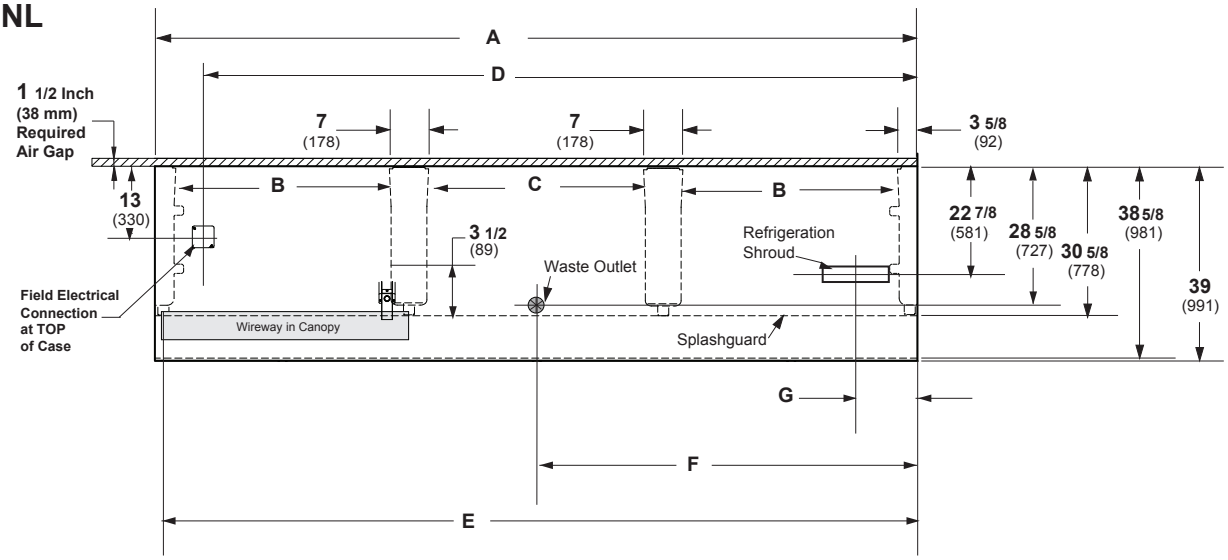

(12 Foot Model shown above)

		4 ft	6 ft	8 ft	12 ft
General					
(A)	Case Length (without ends or partitions) (Each end and insulated partition adds 1 1/2 in. (38 mm) to case line up.)	48 1/8 (1222)	72 1/4 (1835)	96 1/4 (2445)	144 3/8 (3668)
	Maximum O/S dimension of case back to front (includes bumper)	38 5/8 (981)	38 5/8 (981)	38 5/8 (981)	38 5/8 (981)
	Back of case to front of splashguard	30 5/8 (778)	30 5/8 (778)	30 5/8 (778)	30 5/8 (778)
(B)	Distance between edges of external legs and center legs	NA	29 (737)	41 (1041)	41 (1041)
(C)	Distance between edges of center legs	41 1/8 (1045)	NA	NA	41 1/8 (1045)
	Distance between front legs and splashguard	3 1/4 (83)	3 1/4 (83)	3 1/4 (83)	3 1/4 (83)
Electrical Service (Field Electrical Wiring Connection)					
(D)	RH End of case to center of Field Electrical Wiring Connection (top of case)	39 3/8 (1000)	63 1/2 (1613)	87 1/2 (2223)	135 1/2 (3442)
	Back of case to center of Field Electrical Wiring Connection	13 (330)	13 (330)	13 (330)	13 (330)
	Length of electrical wireway	44 5/8 (1133)	33 1/2 (851)	45 7/8 (1165)	45 7/8 (1165)
(E)	RH end of case to LH end of electrical wireway (top of case)	46 1/2 (1181)	70 1/2 (1791)	94 1/2 (2400)	142 5/8 (3630)
Waste Outlets					
(F)	RH End of case to the center of waste outlet	24 1/8 (613)	24 1/8 (613)	24 1/8 (613)	72 1/4 (1835)
	Back O/S of case to center of waste outlet(s)	28 5/8 (727)	28 5/8 (727)	28 5/8 (727)	28 5/8 (727)
	Schedule 40 PVC drip pipe	1 1/4 (32)	1 1/4 (32)	1 1/4 (32)	1 1/4 (32)
Refrigeration Shroud					
(G)	Back of case to center of refrigeration shroud	22 7/8 (581)	21 1/8 (537)*	22 7/8 (581)	22 7/8 (581)
	End of case to center of refrigeration shroud *6 ft case at a 42° angle parallel to the plenum	9 1/2 (241)	7 5/8 (194)*	9 1/2 (241)	9 1/2 (241)

Open Multideck Medium Temperature Display Case
Narrow Bottom, Medium Height Front

ID5NM

Electrical Data

Number of Fans	4 ft	6 ft	8 ft	12 ft
8.25-in.	1	2	2	3

			Amperes				Watts			
Evaporator Fan			**4 ft**	**6 ft**	**8 ft**	**12 ft**	**4 ft**	**6 ft**	**8 ft**	**12 ft**
120V	60Hz	Energy Efficient	0.25	0.50	0.50	0.75	16	32	32	48
230V	50/60Hz	Energy Efficient	0.13	0.26	0.26	0.39	16	32	32	48
Minimum Circuit Ampacity										
120V	60Hz	Energy Efficient	0.45	0.70	0.70	0.95				
230V	50/60Hz	Energy Efficient	0.33	0.46	0.46	0.59				
Maximum Over Current Protection										
120V			20	20	20	20				
230V			15	15	15	15				

Lighting

ONLY LIGHTING CONFIGURATIONS THAT ARE COMPLIANT WITH THE **U.S.** DEPT. OF ENERGY **(DOE) 2017** REGULATION ARE AVAILABLE FOR SALE FOR USE IN THE **U.S.A.**

	Amperes				Watts			
	4 ft	**6 ft**	**8 ft**	**12 ft**	**4 ft**	**6 ft**	**8 ft**	**12 ft**
LED LIGHTING								
Standard LED Canopy Lights								
1 Row LED Canopy (Standard)	0.16	0.22	0.31	0.47	19	27	38	57
Optional LED Shelf Lights								
1 Row of Shelves	0.06	0.07	0.11	0.17	7	9	13	20
2 Rows of Shelves	0.11	0.15	0.22	0.33	13	18	27	40
3 Rows of Shelves	0.17	0.22	0.33	0.50	20	27	40	60
4 Rows of Shelves	0.22	0.30	0.44	0.67	27	36	53	80
5 Rows of Shelves	0.28	0.37	0.56	0.83	33	44	67	100
6 Rows of Shelves	0.33	0.44	0.67	1.00	40	53	80	120
Rail Light-1 Row	0.06	0.07	0.11	0.17	7	9	13	20

120V Lighting Circuit Total = Standard Lighting + Total Optional Lighting + Optional Shelf Lighting
230V Lighting Circuit Total = Multiply 120V Lighting Circuit Total by 0.52

ENDS or PARTITIONS

Each standard end and each insulated partition adds 1 1/2 in. (38 mm) to case line up. Optional view end with end bumper adds 3 3/4 in. (95 mm).

PHYSICAL DATA

Merchandiser Drip Pipe (in.) Schedule 40 PVC	1 1/4
Merchandiser Liquid Line (in.)	3/8
Merchandiser Suction Line (in.)	5/8

ESTIMATED SHIPPING WEIGHT †

Case					**Solid End**
	4 ft	***6 ft***	***8 ft***	***12 ft***	***(each)***
lb *(kg)*	800 (363)	1000 (454)	1200 (544)	1400 (635)	100 (45)

† Actual weights will vary according to optional kits included.

Shelf Options

Approved shelf sizes for standard (horizontal, 2-3 position brackets) displays:

14-inch
16-inch
18-inch

Contact engineering for non-standard (4 position brackets or other) display recommendations.

Minimum number of Shelves: 3

Optimal number of Shelves: 4

Maximum number of Shelves: 8

Maximum number of Lighted Shelves: 6

Standard shelf complement for test purposes: (4) rows of 18-in. shelves evenly distributed vertically.

Fan Wiring
Offtime Defrost

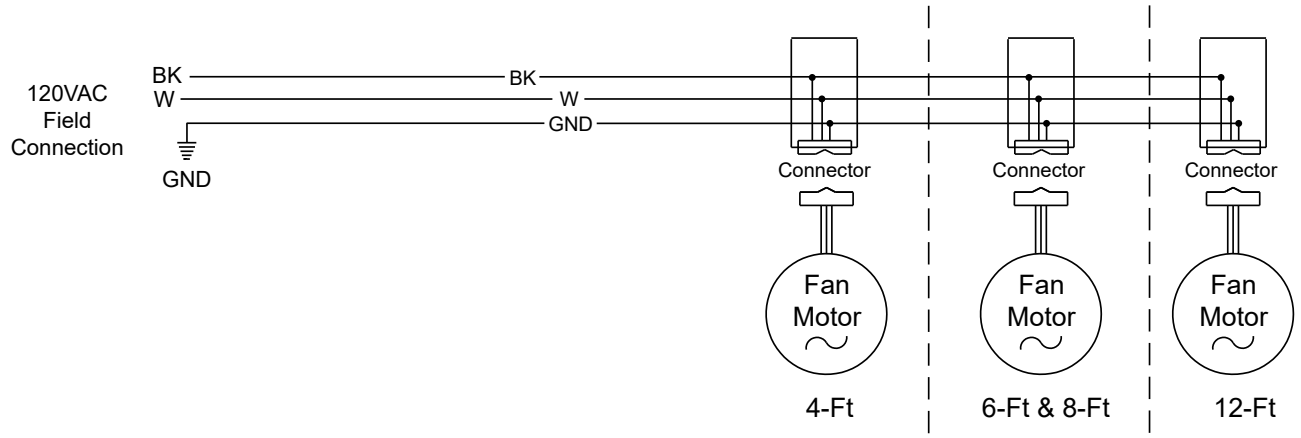

LED Canopy Light Circuits

LED Canopy Lighting - 1 Row

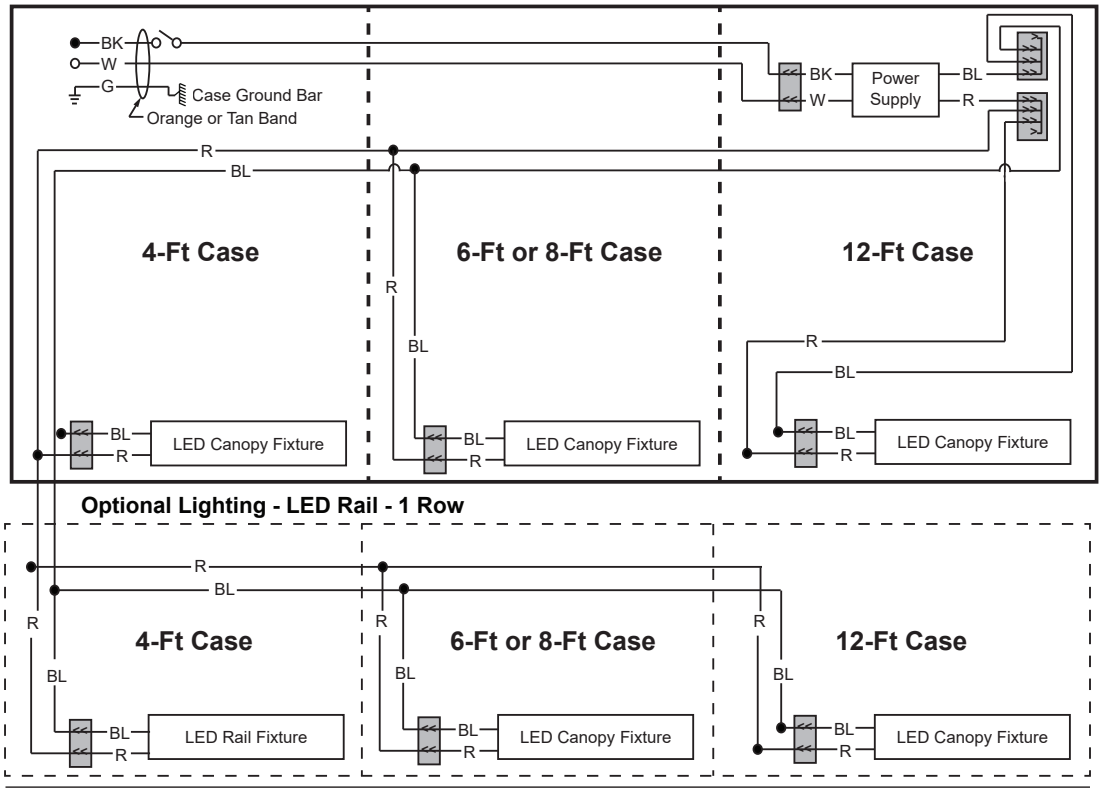

WARNING

All components must have mechanical ground, and the merchandiser must be grounded.

R = Red Y = Yellow G = Green BL = Blue BK = Black W = White

● = 120V Power ○ = 120V Neutral ⏚ = Field Ground ⩞ = Case Ground

Optional Shelf Lighting—LED Fixtures

Optional Shelf Harness and LED Light Circuits for 2 or 3 Rows of Shelves

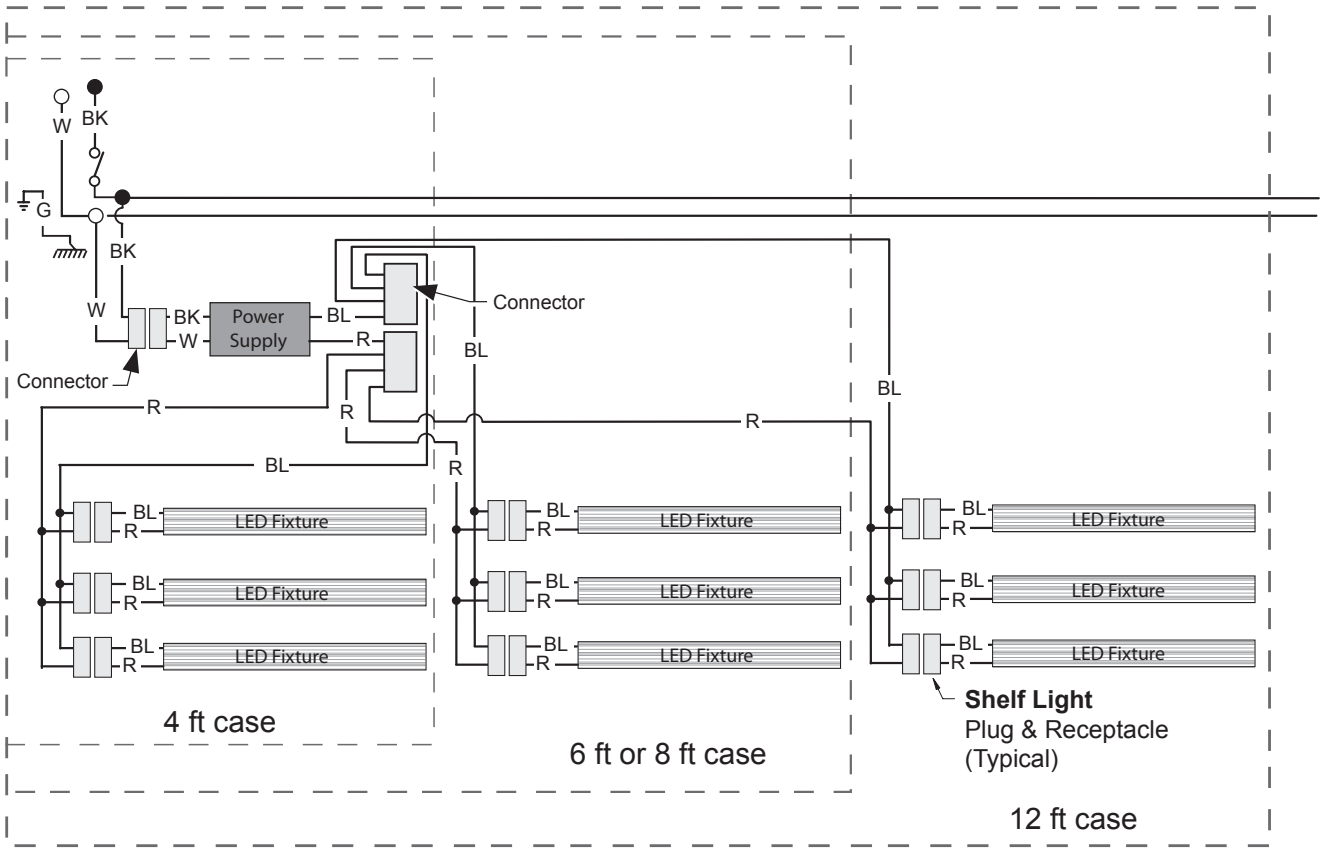

WARNING

All components must have mechanical ground, and the merchandiser must be grounded.

R = Red Y = Yellow G = Green BL = Blue BK = Black W = White

● = 120V Power ○ = 120V Neutral ⏚ = Field Ground ⩫ = Case Ground

Optional Shelf Lighting—LED Fixtures

Optional Shelf Harness and LED Light Circuits for 6 or 7 Rows of Shelves

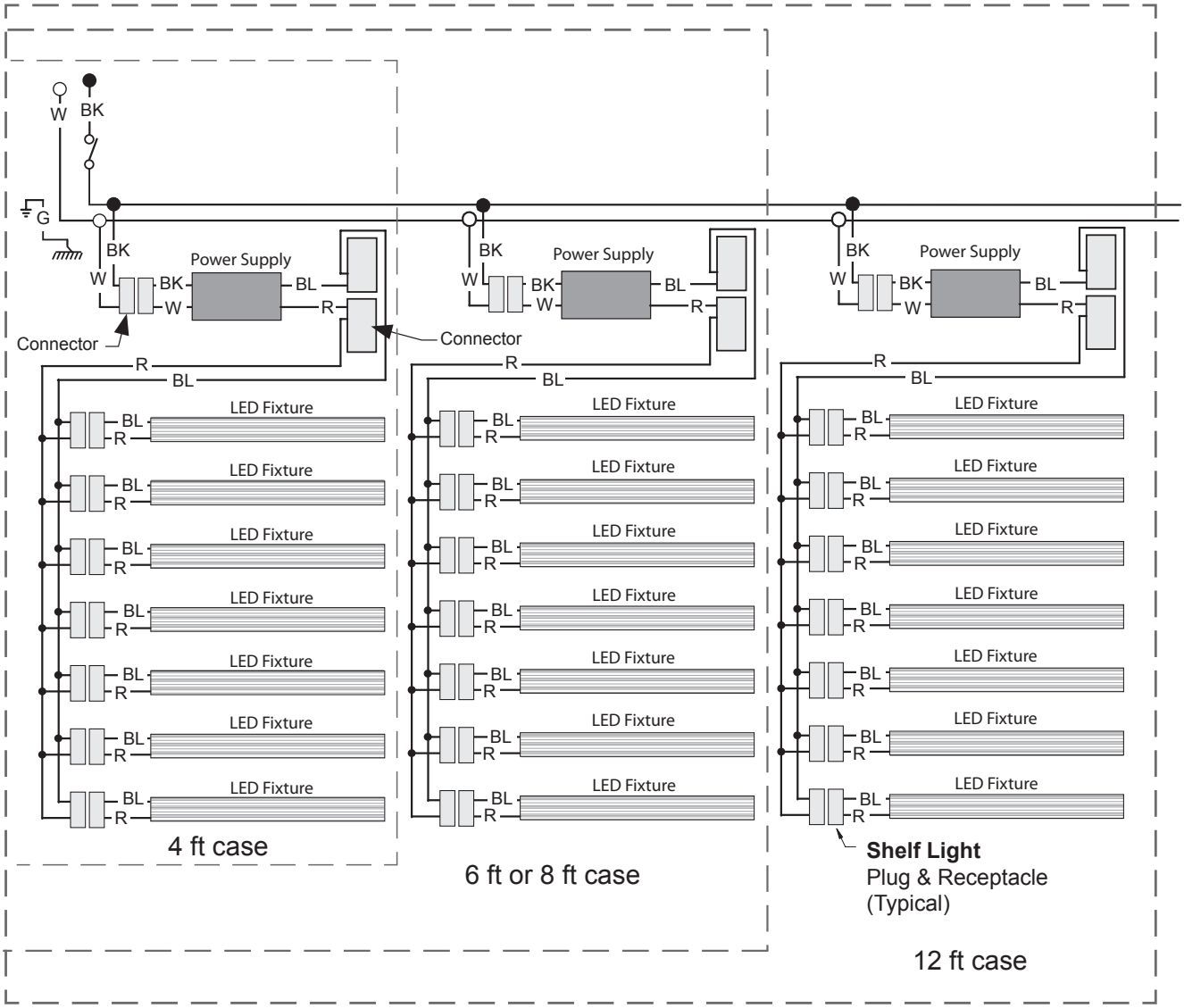

WARNING

All components must have mechanical ground, and the merchandiser must be grounded.

R = Red Y = Yellow G = Green BL = Blue BK = Black W = White

● = 120V Power ○ = 120V Neutral ⏚ = Field Ground ⩫ = Case Ground

Wiring Diagram (A2L detection and mitigation system)

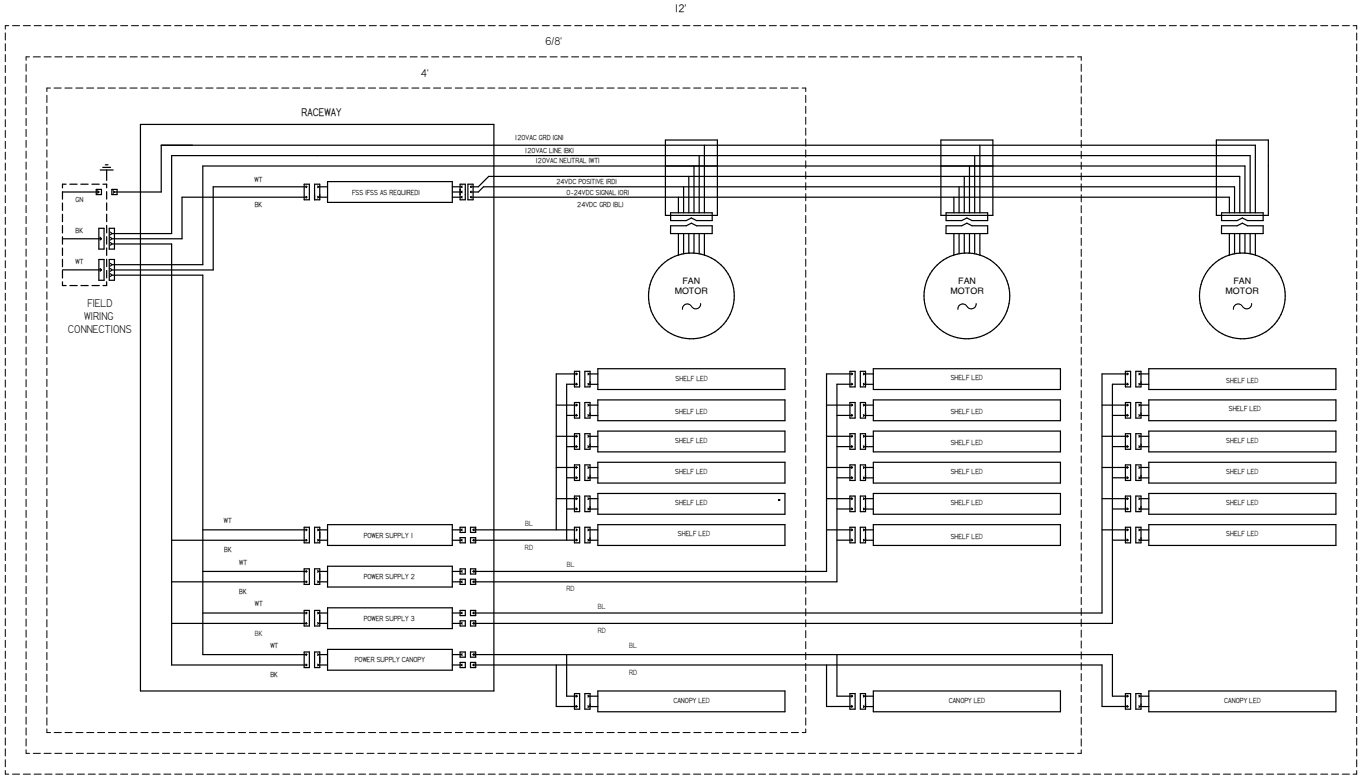

WIRE COLOR UL COLOR CODES / ABBREVIATIONS		FACTORY 14GA WIRE	HUSSMANN®	
— RED = RD	— WHITE = WT	FACTORY 10GA WIRE	DIAGRAM-A2L GAS DETECT INSIGHT DANFOSS	
— BLACK = BK	— GREEN = GN	FIELD WIRE		
— BLUE = BL	— BROWN = BN			
— YELLOW = YL	— ORANGE = OR			
— GRAY = GY	— VIOLET = VT	DO NOT SCALE DRAWING	P/N 3220871	REV C
		SHEET 1 OF 4		

QCF 3.2 WIRE DIAGRAM SIZE D-H

Wiring Diagram (ID5NM12, A2L detection and mitigation system)

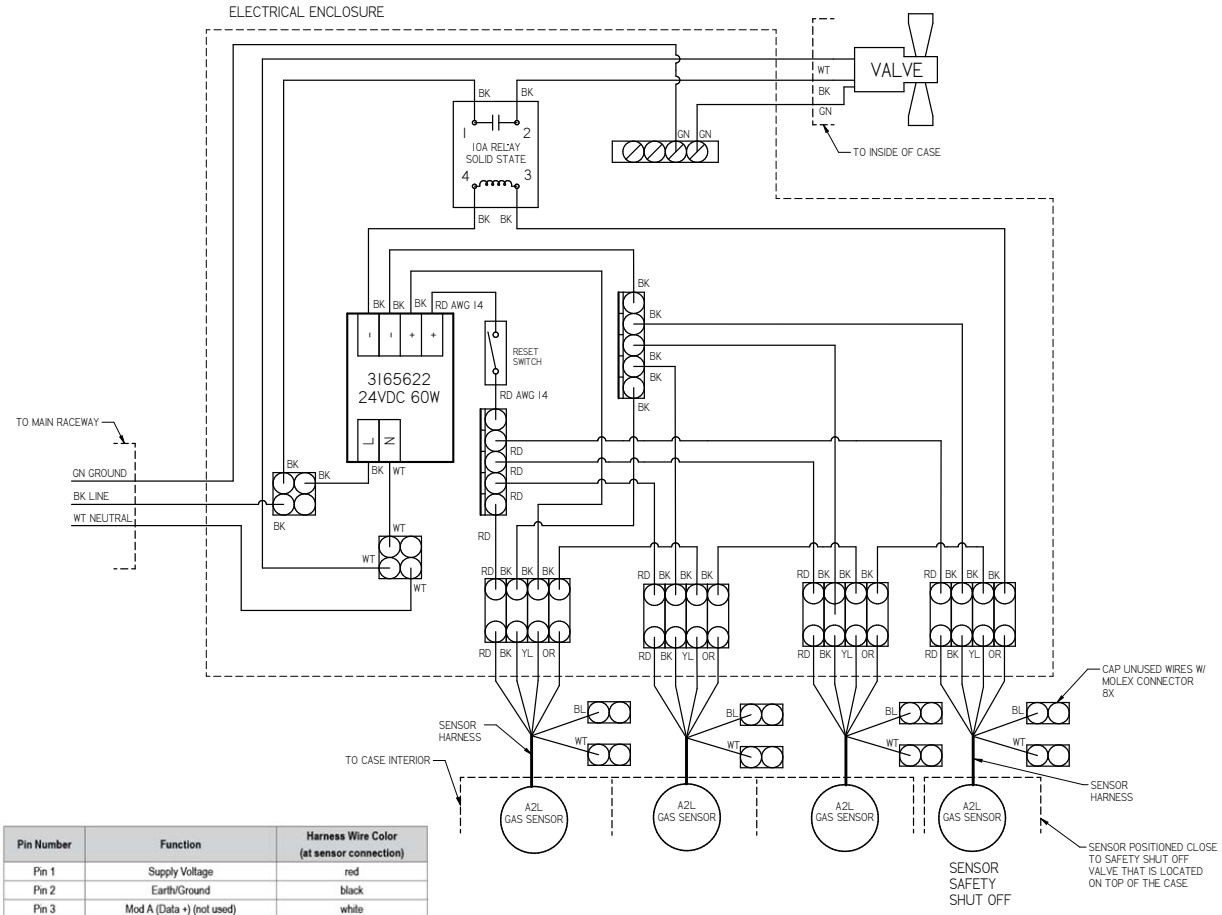

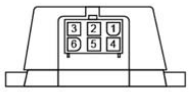

Pin Number	Function	Harness Wire Color (at sensor connection)
Pin 1	Supply Voltage	red
Pin 2	Earth/Ground	black
Pin 3	Mod A (Data +) (not used)	white
Pin 4	Mod B (Data -) (not used)	blue
Pin 5	Input Relay	yellow
Pin 6	Normally Open Contacts Output	orange

Relay Operation

- Relay is energized on power up when not in alarm state
- Relay is de-energized in alarm or no power state

WIRE COLOR
UL COLOR CODES / ABBREVIATIONS

— RED = RD — WHITE = WT
— BLACK = BK — GREEN = GN
— BLUE = BL — BROWN = BN
— YELLOW = YL — ORANGE = OR
— GRAY = GY — VIOLET = VT

FACTORY 14GA WIRE
FACTORY 10GA WIRE
FIELD WIRE

DO NOT SCALE DRAWING
SHEET 2 OF 4

HUSSMANN®
DIAGRAM-A2L GAS
DETECT INSIGHT
DANFOSS

P/N 3220871 REV C

CCF 32 WIRE DIAGRAM SIZE D-H

Wiring Diagram (ID5NM6 / ID5NM8, A2L detection and mitigation system)

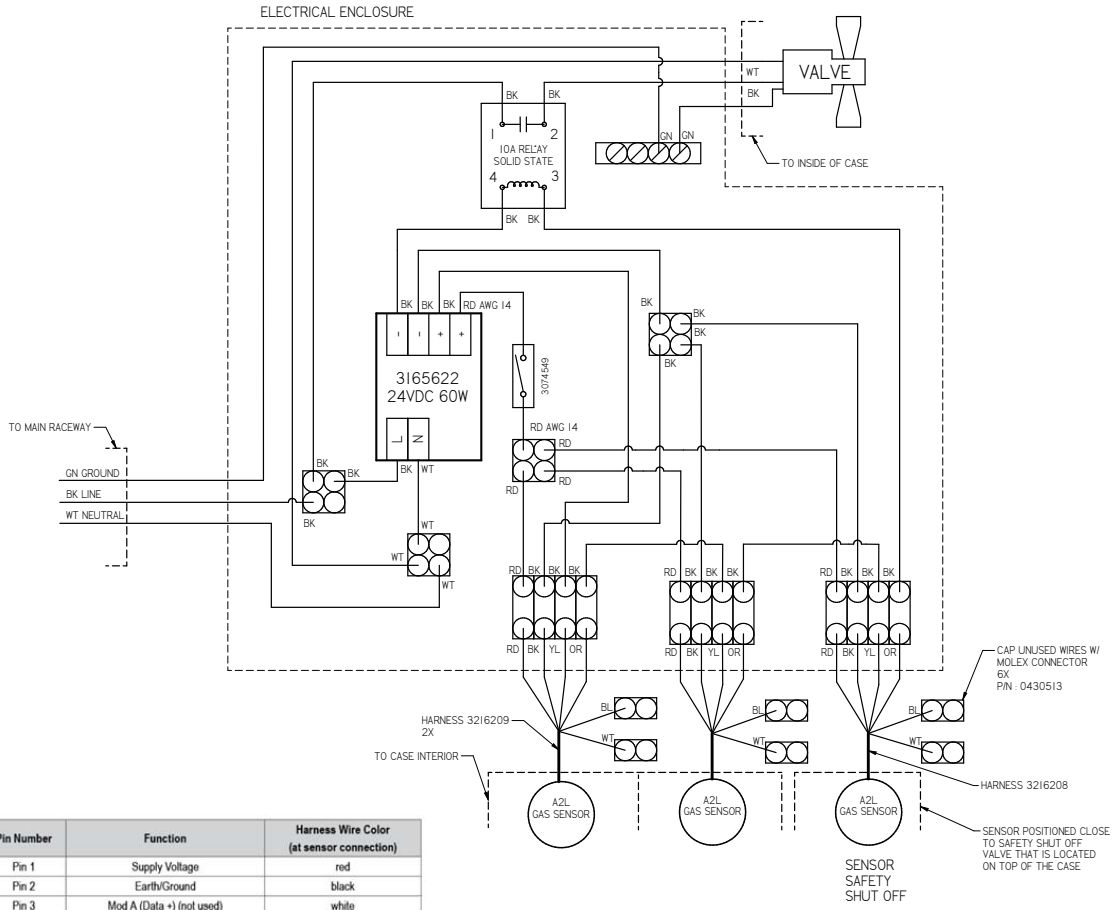

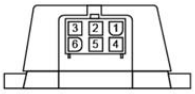

Pin Number	Function	Harness Wire Color (at sensor connection)
Pin 1	Supply Voltage	red
Pin 2	Earth/Ground	black
Pin 3	Mod A (Data +) (not used)	white
Pin 4	Mod B (Data -) (not used)	blue
Pin 5	Input Relay	yellow
Pin 6	Normally Open Contacts Output	orange

Relay Operation

- Relay is energized on power up when not in alarm state
- Relay is de-energized in alarm or no power state

WIRE COLOR UL COLOR CODES / ABBREVIATIONS		FACTORY 14GA WIRE / FACTORY 10GA WIRE / FIELD WIRE	HUSSMANN® DIAGRAM-A2L GAS DETECT INSIGHT DANFOSS	
RED = RD	WHITE = WT			
BLACK = BK	GREEN = GN			
BLUE = BL	BROWN = BN			
YELLOW = YL	ORANGE = OR			
GRAY = GY	VIOLET = VT	DO NOT SCALE DRAWING	P/N 3220871	REV C
		SHEET 3 OF 4		

GDT: 32 WIRE DIAGRAM SIZE D-H

Wiring Diagram (ID5NM4, A2L detection and mitigation system)

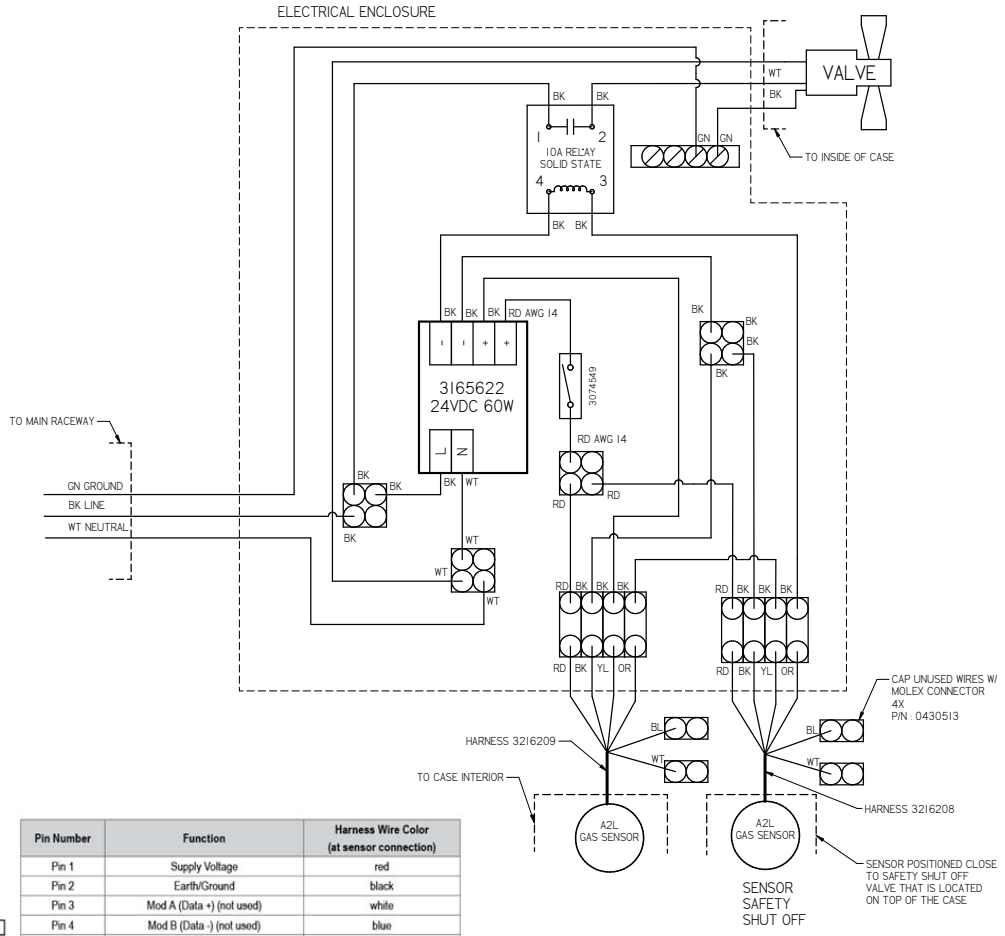

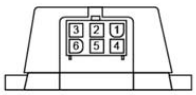

Pin Number	Function	Harness Wire Color (at sensor connection)
Pin 1	Supply Voltage	red
Pin 2	Earth/Ground	black
Pin 3	Mod A (Data +) (not used)	white
Pin 4	Mod B (Data -) (not used)	blue
Pin 5	Input Relay	yellow
Pin 6	Normally Open Contacts Output	orange

Relay Operation

- Relay is energized on power up when not in alarm state
- Relay is de-energized in alarm or no power state

WIRE COLOR UL COLOR CODES / ABBREVIATIONS		FACTORY 14GA WIRE FACTORY 10GA WIRE FIELD WIRE	HUSSMANN® DIAGRAM-A2L GAS DETECT INSIGHT DANFOSS	
— RED = RD — BLACK = BK — BLUE = BL — YELLOW = YL — GRAY = GY	— WHITE = WT — GREEN = GN — BROWN = BN — ORANGE = OR — VIOLET = VT	DO NOT SCALE DRAWING SHEET 4 OF 4	P/N 3220871	REV. C

QDF 3.2 WIRE DIAGRAM SIZE D-H

HUSSMANN®

Estimating Refrigeration and Electrical Load (for comparison purposes only)

Case Btu
To determine Btu for a case, refer to the performance data chart on page 2. Select lit or unlit shelves, then select the type of remote refrigeration system (parallel or conventional), which will give Btu/hr/ft. Multiply this number by the length of the case to determine Btu per hour.

Case Electrical
Refer to store legend to determine number of circuits. Lighting should be specified in store legend.

Fan electrical load for a case is computed by selecting the case length and fan voltage on page 6. For example, a 12 ft case uses 3 fans. The store legend specifies fans on a 230V circuit. In this instance, fans use 0.39 Amps and the MCA is 0.59. When applied, ambient fans, anti-sweat heaters, controllers, etc. must be included in the MCA. Include lights in the MCA if lights are on same circuit.

Lights may be on a separate circuit. To estimate lighting load: select case length (12 ft), canopy lighting [standard or optional] (here 0.70 for standard), and shelf or rail lighting [maximum for which case is wired] (1.48 for six shelves); then add together [0.48 + 1.48 = 1.96 amps for 120V] (for 230V, multiply 1.96 * 0.52 = 1.02).

Line Sizing — Refer to store legend.
Hussmann Line Sizing Charts are engineered for use with Hussmann refrigeration equipment.

DS_ID5NM_0541505_M_EN
Revision History

Revision K: January 2023: Added CO_2 note, Page 2.
Revision L: December 2023: Updated fan and lighting information. Removed replacement parts page. Updated wiring diagrams.
Revision M: (March 2026) Updated format and added A2L, CO_2, and glycol information.

Scan the QR code on your mobile device to access additional product information or order parts.

Parts may also be ordered at:
parts.hussmann.com
Call toll free: 1.855.487.7778

We reserve the right to change or revise specifications and product design in connection with any feature of our products. Such changes do not entitle the buyer to corresponding changes, improvements, additions or replacements for equipment previously sold or shipped.

©2026 HUSSMANN CORPORATION • BRIDGETON, MO 63044-2483 U.S.A.
U.S. & CANADA 1-800-922-1919 • MEXICO 800-890-2900 • WWW.HUSSMANN.COM

Spanish P/N 0541506
French P/N 3250573