HUSSMANN IMPACT Merchandisers

P4

Data Sheet Set

P/N 0378425C

NSF® Certified

December, 2003

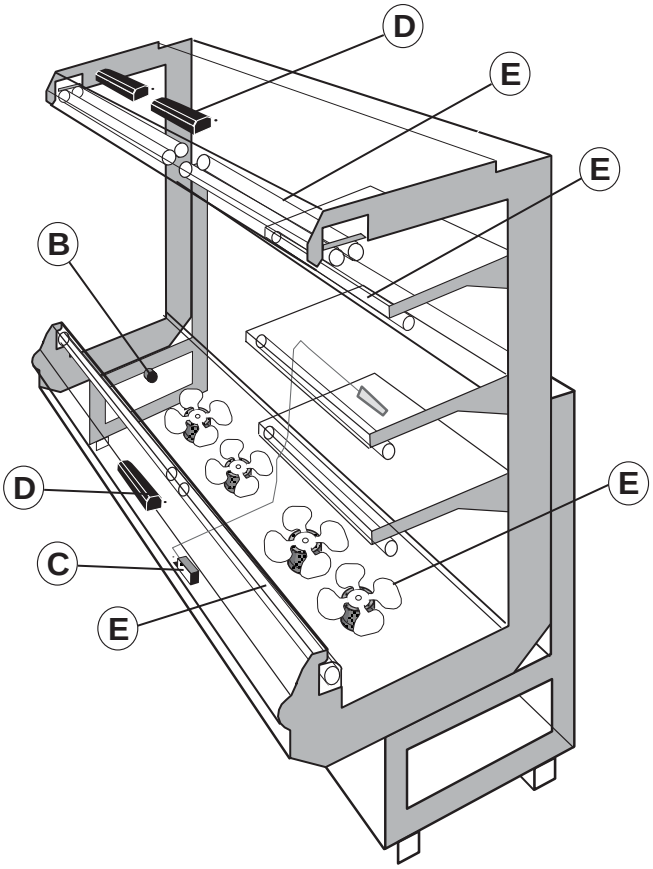

Item	Part #	Description	Wiring Item #
FAN ASSEMBLIES AND THERMOSTATS			
A.	**6W** Fan Assembly		1
	0047000	Fan Motor, Evaporator	
	0315470	Fan Blade embossing toward motor	
B.	0311588	Standard Non-adjustable Thermostat	2
C.	0137880	Optional Adjustable Refrigeration Thermostat	3

Item	Part #	Description	Wiring Item #
LAMPS AND BALLASTS			
D.	0428648	Ballast 2 lamps	4
D.	0428649	Ballast 3 lamps	4
E.		Fluorescent Lamp Replace with like fixtures	5

Note: Changed items have been <u>underlined</u>.

Engineering
Plan View

Produce

12-2003

Dimensions shown as inches and (mm).

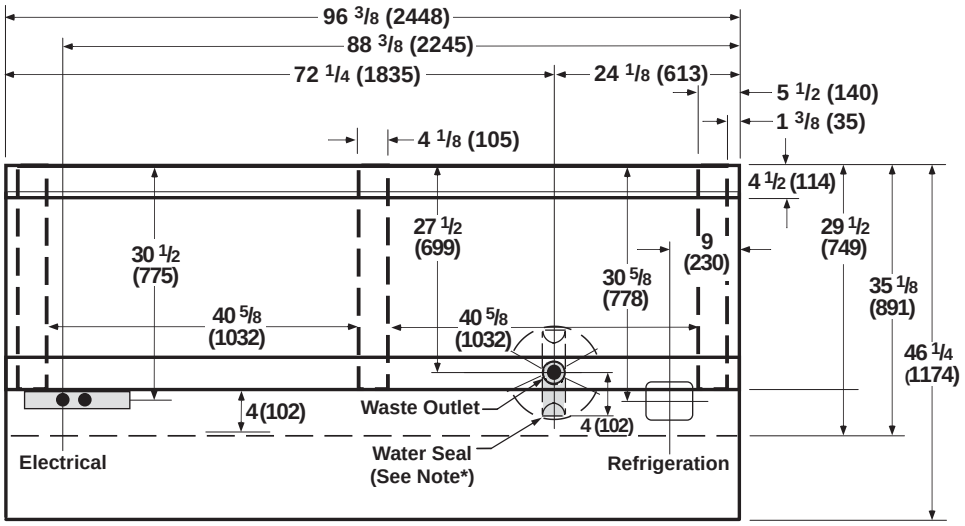

	8 Ft	12 ft
General		
Length of Case *(without ends or partitions)*	96 3/8 (2448)	144 1/2 (3670)
Maximum outside dimensions of case back to front *(includes bumper)*	46 1/4 (1174)	46 1/4 (1174)
Back of case to front of splashguard	35 1/8 (891)	35 1/8 (891)
Back of case to outside edge of front skidrail	29 1/2 (749)	29 1/2 (749)
Width of skidrail	4 1/2 (114)	4 1/2 (114)
Right end of case to outside edge of external support	5 1/2 (140)	5 1/2 (140)
Distance between inside edges of external support and center support	40 5/8 (1032)	40 5/8 (1032)
Distance between inside edges of center supports	NA	44 (1118)
Width of external support	4 1/8 (105)	4 1/8 (105)
Stub-up area between front skidrail and splashguard	4 (102)	4 (102)
Right edge of case (excluding end) to inside edge of external support	1 3/8 (35)	1 3/8 (35)
Electrical Service		
Right end of case to center of farthest knockout	88 3/8 (2245)	136 1/2 (3467)
Back outside of case to center of knockout	30 1/2 (775)	30 1/2 (775)
Length of electrical raceway	34 1/2 (778)	34 1/2 (778)
Waste Outlet		
Right end of case to center of waste outlet	24 1/8 (613)	72 1/4 (1835)
Left end of case to center of waste outlet	72 1/4 (1835)	72 1/4 (1835)
Back outside of case to center of waste outlet	27 1/2 (699)	27 1/2 (699)
Water Seal		
Edge of water seal to center of waste outlet	4 (102)	4 (102)
Outside diameter of drip pipe	1 1/2 (38)	1 1/2 (38)
***Note:** *Water seal outlet must clear front skid rail.*		
Refrigeration Outlet		
Right end of case to center of refrigeration outlet	9 (230)	9 (230)
Back outside of case to center of refrigeration outlet	30 5/8 (778)	30 5/8 (778)

Impact P4
All Produce

Dimensions shown as inches and (mm).

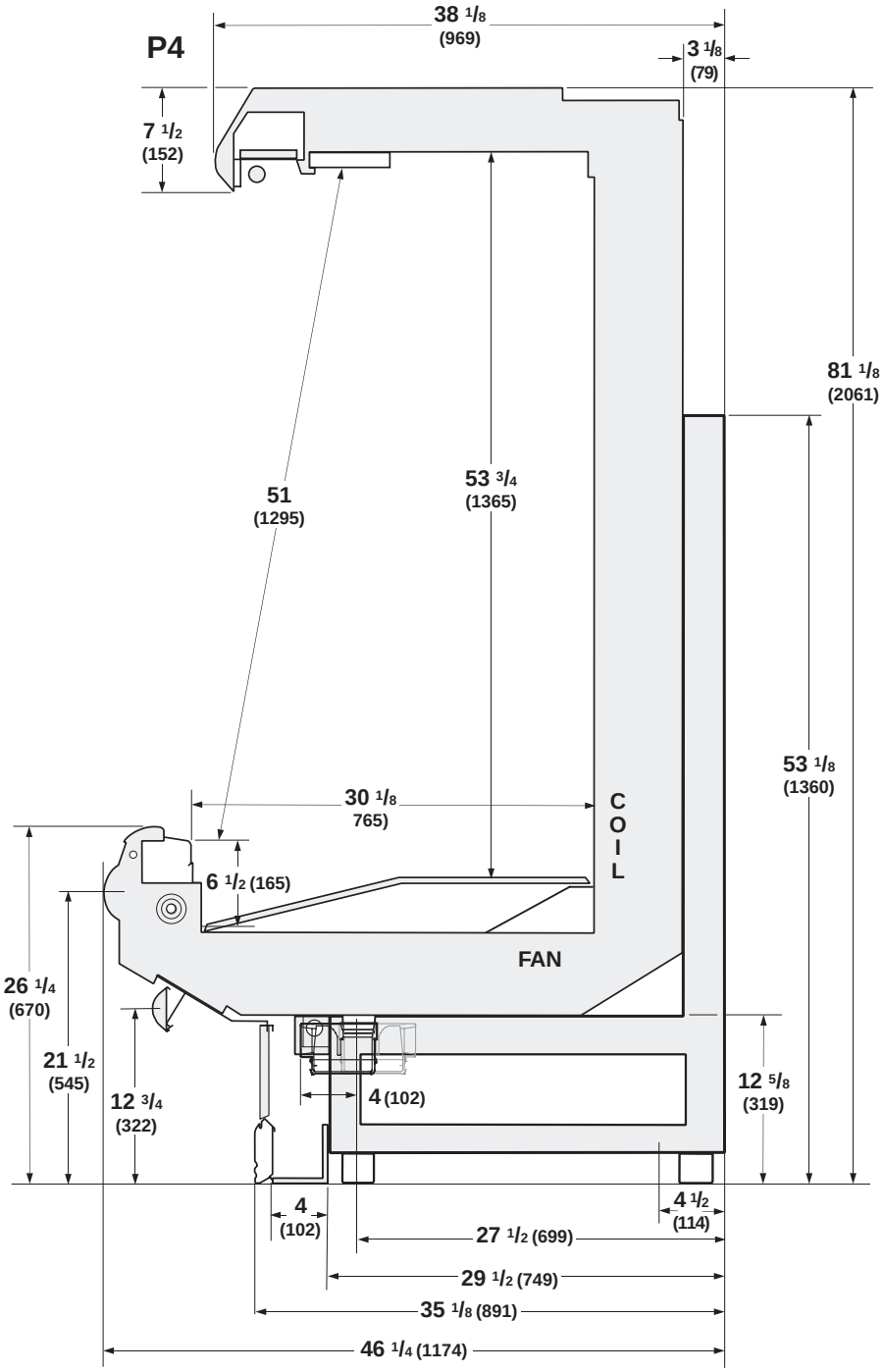

REFRIGERATION DATA

Note: This data is based on store temperature and humidity that does not exceed 75°F and 55% R.H.

	P4	P4E
Discharge Air °F	29	31
Evaporator °F	21	24
Unit Sizing °F	19	22

Btu/hr/ft**	**P4**	**P4E**
Parallel	1535	1455
Conventional	1650	1585

**For all refrigeration equipment other than Husssmann, use conventional BTU values.

DEFROST DATA

	P4	P4E
Frequency (hr)	6	6
Defrost Water (lb/ft/day)	9	9

(±15% based on case configuration and product loading.

Offtime	**P4**	**P4E**
Temp Term °F	48°F	48°F
Failsafe Minutes	30	30

Electric or Gas Not Recommended

Standard Defrost Thermostat
Close on rise: close 48°F – open 33°F

CONVENTIONAL CONTROLS

Low Pressure Backup Control

	P4	P4E
CI/CO**	14/4°F	17/7°F

Indoor Unit Only, Pressure Defrost Termination** **48°F**

**Use a Temperature Pressure Chart to determine PSIG conversions.

PHYSICAL DATA

Merchandiser Drip Pipe (in.)	1 1/2
Liquid Line (in.)	3/8
Suction Line (in.)	7/8

Estimated Charge (lbs)***

	P4	P4E
8 ft	2.7	3.2
12 ft	3.9	4.5

***This is an average for all refrigerant types actual refrigerant charge may vary by approximately half a pound.

Length (in.) Added to Lineup by Each End or Insulated Partition 1 1/2

NSF Certification
These merchandisers are manufactured to meet ANSI /National Sanitation Foundation (NSF ®) Standard #7 requirements.

Electrical Data

	8 Ft	12 Ft
Number of Fans — 6W	**2**	**3**

	Amperes		Watts	
Merchandiser	**8 Ft**	**12 Ft**	**8 Ft**	**12 Ft**
Fans				
Standard (120V 60Hz)	2.80	4.20	210	320
Export (230V 50Hz)	1.52	2.28	228	342
Energy Efficient (120V 60Hz)	1.52	2.28	100	150
Constant on Anti-sweat Heaters	NA			
Cycling Anti-sweat Heaters	NA			
Min. Circuit Ampacity				
With Standard Fans (120V 60Hz)	3.00	4.40		
Export (230V 50Hz)	1.72	2.48		
With Energy Efficient Fans (120V 60Hz)	1.72	2.48		
Maximum Over Current Protection 120V	20	20		
Maximum Over Current Protection 230V	15	15		
Supplemental Gas Heaters	NA			
208V 1Φ Electric Defrost	NA			
Standard Lighting				
1 Row Canopy	0.51	0.77	59	85
Optional Lighting				
1 Row Canopy and 1 Rail	1.02	1.54	118	170
2 Rows Canopy	1.02	1.54	118	170
2 Rows Canopy and 1 Row Rail	1.53	2.31	177	255
Optional Shelf Lighting				
1 Row of Shelves	0.51	0.77	59	85
2 Rows of Shelves	1.02	1.54	118	170
3 Rows of Shelves	1.53	2.31	177	255

Fan Wiring Off-time Defrost

4 & 6 Fans

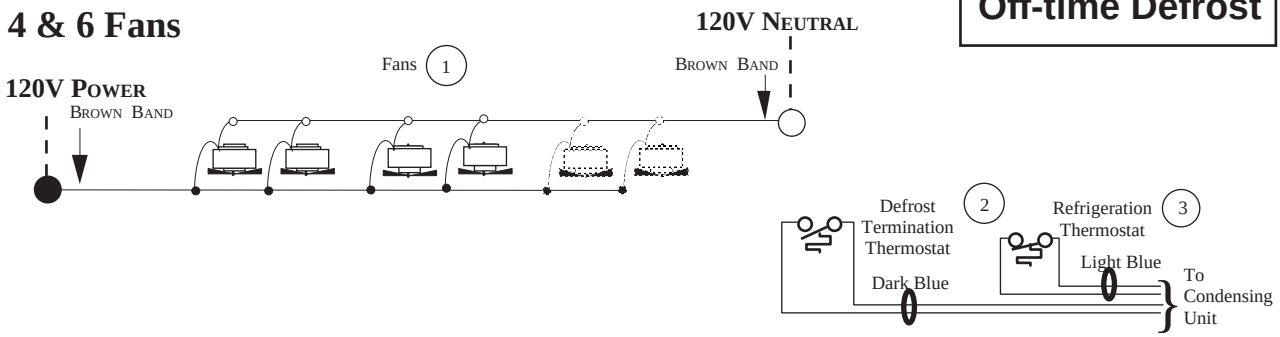

Shelf Lighting

Optional Shelf Harness and Light Circuits for One Row of Shelves

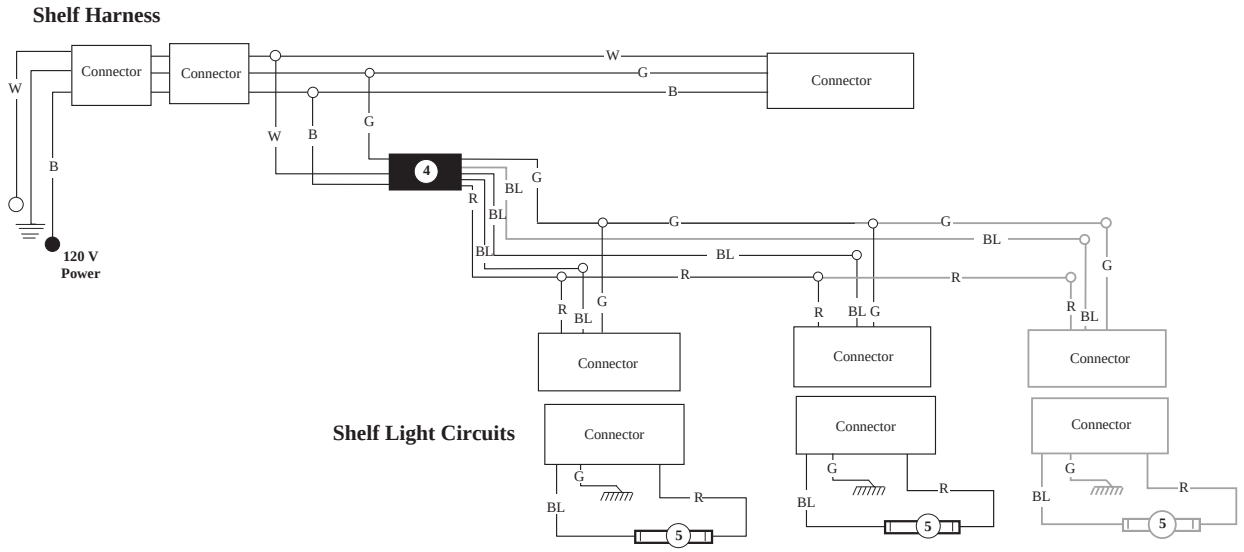

WARNING

All components must have mechanical ground, and the merchandiser must be grounded.

CIRCLED NUMBERS = PARTS LIST ITEM NUMBERS

Grayed components in 12 foot models only.

R = Red Y = Yellow G = Green BL = Blue B = Black W = White

● = **120V Power** ○ = **120V Neutral** = **Field Ground** = **Case Ground**

Light Circuits

Standard Lighting 1 Row Canopy (Standard on Multideck)

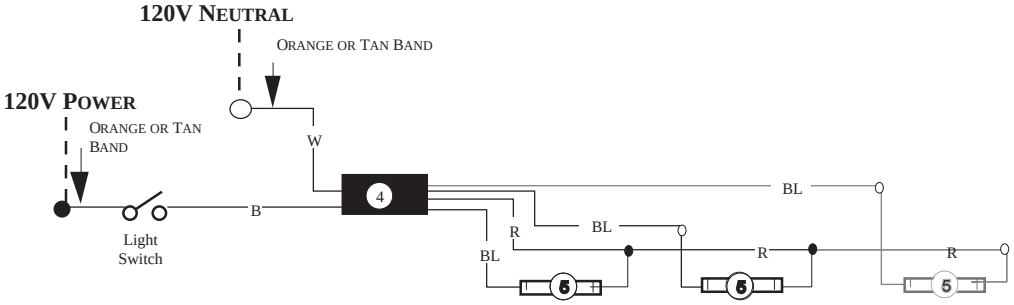

Optional Lighting 2 Rows Canopy

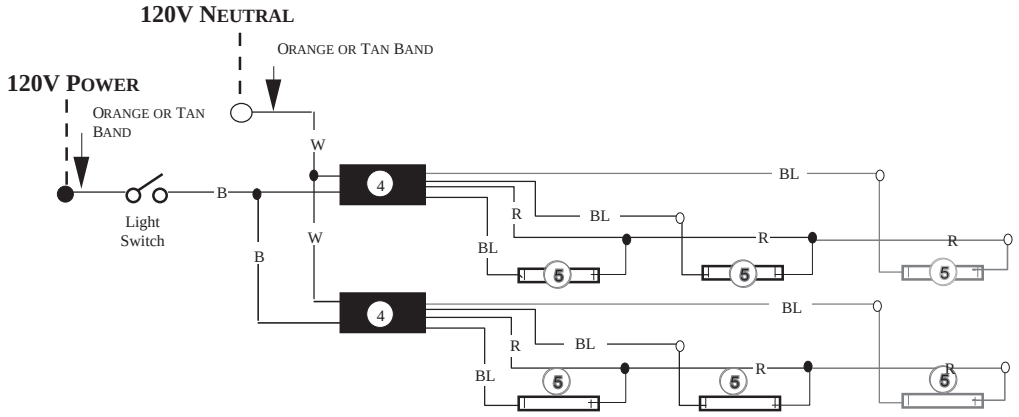

Optional Lighting 1 Row Rail

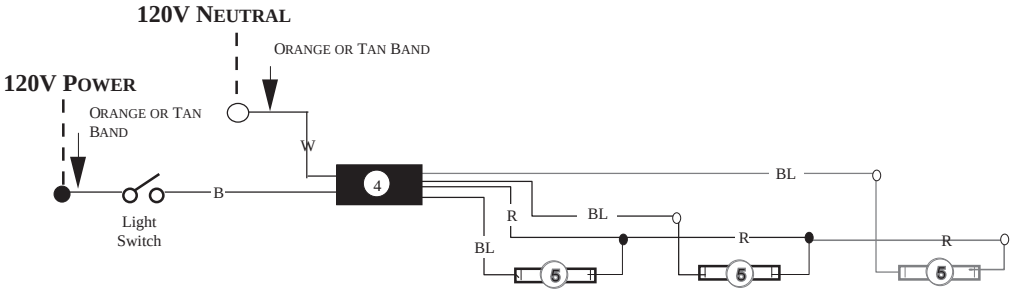

WARNING

All components must have mechanical ground, and the merchandiser must be grounded.

CIRCLED NUMBERS = PARTS LIST ITEM NUMBERS

Grayed components in 12 foot models only.

R = Red Y = Yellow G = Green BL = Blue B = Black W = White

● = **120V POWER** ○ = **120V NEUTRAL**