HUSSMANN®/Chino

ASCS

DELI, MEAT, FISH SERVICE CASE

Installation & Operation Manual

REV.0209

HUSSMANN®

ASCS

DELI, MEAT, FISH SERVICE CASE

P/N IGSV-ASCS-0209

INSTALLATION & OPERATION GUIDE

General Instructions

Table of Contents

General Instructions **2**
Cut & Plan Views **3**
Installation **3**
LEVELING 4
Plumbing **6**
WASTE OUTLET AND P-TRAP 6
Manifold Flush System **7**
Humidity System **9**
Refrigeration **10**
T-STAT LOCATION 11
Electrical **12**
WIRING COLOR CODE 12
ASHRAE COLOR CODE 12
Finishing Touches **13**
JOINT TRIM 13
User Information **14**
STOCKING 14
CASE CLEANING 14
NON-GLARE GLASS 15
PLEXIGLASS and ACRYLIC CARE 15
REPLACING FLUORESCENT LAMPS 16
Maintenance **16**
TIPS and TROUBLESHOOTING 16
Electrical and Refrigeration Specifications **18**
Electrical Schematics **19**
Appendices **34**
APPENDIX A. – Temperature Guidelines 34
APPENDIX B. – Application Recommendations 34
APPENDIX C. – Field Recommendations - 34
APPENDIX D. – Recommendations to user - 35

THIS BOOKLET CONTAINS INFORMATION ON:

ASCS refrigerated, service deli, meat, fish mechandiser

SHIPPING DAMAGE

All equipment should be thoroughly examined for shipping damage before and during unloading.
This equipment has been carefully inspected at our factory and the carrier has assumed responsibility for safe arrival. If damaged, either apparent or concealed, claim must be made to the carrier.

APPARENT LOSS OR DAMAGE

If there is an *obvious loss or damage*, it must be noted on the freight bill or express receipt and signed by the carrier's agent; otherwise, carrier may refuse claim. The carrier will supply necessary claim forms.

CONCEALED LOSS OR DAMAGE

When loss or damage *is not apparent until after equipment is uncrated*, a claim for concealed damage is made. Make request in writing to carrier for inspection within 15 days, and retain all packaging. The carrier will supply inspection report and required claim forms.

SHORTAGES

Check your shipment for any possible shortages of material. If a shortage should exist and is found to be the responsibility of Hussmann Chino, *notify Hussmann Chino*. If such a shortage involves the carrier, *notify the carrier immediately,* and request an inspection. Hussmann Chino will acknowledge shortages within ten days from receipt of equipment.

HUSSMANN CHINO PRODUCT CONTROL

The serial number and shipping date of all equipment has been recorded in Hussmann's files for warranty and replacement part purposes. All correspondence pertaining to warranty or parts ordering must include the serial number of each piece of equipment involved, in order to provide the customer with the correct parts.

The Hussmann warranty is printed on the back of this guide.

Keep this booklet with the case at all times for future reference.

HUSSMANN®/Chino
A publication of
Hussmann® Chino
13770 Ramona Avenue • Chino, California 91710
(909) 628-8942 FAX
(909) 590-4910
(800) 395-9229

Cut & Plan Views

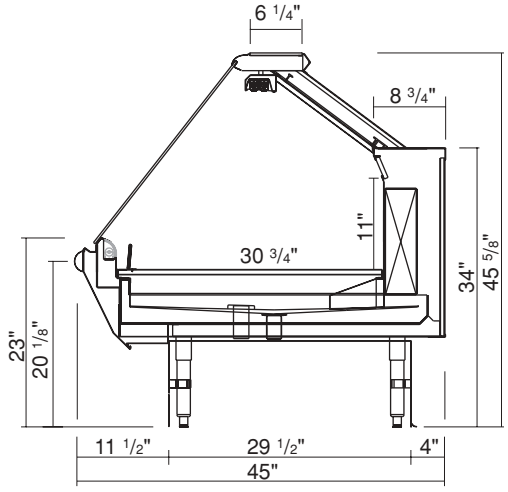

ASCS
Single Deck Refrigerated Service
Scale = 1/2"

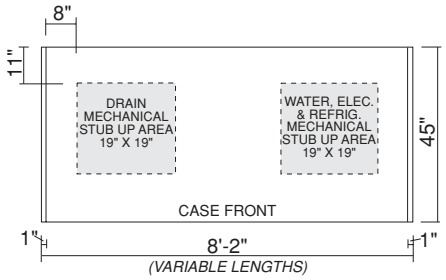

ASCS
Plan View
Scale = 1/4"

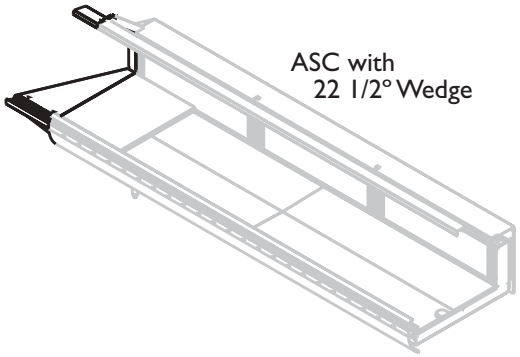

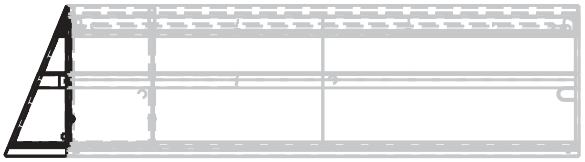

ASC with 22 1/2° Wedge

Installation

LOCATION

The refrigerated merchandisers have been designed for use only in air conditioned stores where temperature and humidity are maintained at or below 75°F and 55% relative humidity. DO NOT allow air conditioning, electric fans, ovens, open doors or windows (etc.) to create air currents around the merchandiser, as this will impair its correct operation.

Product temperature should always be maintained at a constant and proper temperature. This means that from the time the product is received, through storage, preparation and display, the temperature of the product must be controlled to maximize life of the product.

UNCRATING THE STAND

Place the fixture as close to its permanent position as possible. Keep in place, attached case until ready to set/bolt to adjoining case.

TIGHTEN GLASS SCREWS

Tighten screws along clamshell located on the underside of glass before placing unit into operation.

EXTERIOR LOADING

These models have **not** been structurally designed to support excessive external loading. **Do not walk on their tops**. This could cause serious personal injury and damage to the fixture.

SETTING AND JOINING

The sectional construction of these models enable them to be joined in line to give the effect of one continuous display. A joint trim kit is supplied with each joint.

LEVELING

Important! It is imperative that cases be leveled from front to back and side to side prior to joining. A level case is necessary to insure proper operation, water drainage, glass alignment, and operation of the hinges supporting the glass. Leveling the case correctly will solve all hinge operation and glass alignment problems.

NOTE: A. To avoid removing concrete flooring, begin lineup leveling from the highest point of the store floor.
B. When wedges are involved in a lineup, set them first.

All cases were leveled and joined prior to shipment to insure the closest possible fit when cases are joined in the field. When joining, use a carpenters level and adjust legs accordingly. The legs on the ASCS are adjustable and do not require shims. Simply screw the leg up or down to adjust height.

1. Using case blueprints, measure off and mark on the floor the exact dimensions of where the cases will sit. Snap chalk line for front and back positions of base rail or pedestal. Mark the location of each joint front and back. Find the highest point throughout the lineup. FLOORS ARE NORMALLY NOT LEVEL! Determine the highest point of the floor; cases will be set off this point. All cases in the entire lineup must be brought up to the highest level of the case sitting at the highest point in the lineup. This may be done a few different ways. 1) Walk the floor looking for any mounds or dips. 2) Use a string level. 3) Use a transit. If a wedge is used in the middle of a lineup, the wedge must be set on the highest point on the floor FIRST, with the rest if the lineup being leveled from it. The ASCS case has adjustable legs to allow for leveling.

NOTE: The mock pedestal option supplies panels that clamp on to adjustable legs.

2. Set first case over the highest part of the floor and adjust legs so that case is level. Remove side and back leg braces after case is set and joined.
3. Set second case within one foot (1') of the first case, and remove end shipping support. Keep the supports along the length of the case and far end of case. Level case to the first using the instructions in step one.
4. Apply masking tape 1/8" in from end of case on inside and outside rear mullion on both cases to be joined.
5. Apply liberal bead of case joint sealant (butyl) to first case. Sealant area is shown using a dotted line in illustration in Step 8. Apply heavy amount to cover entire shaded area.

DO NOT USE PERMAGUM

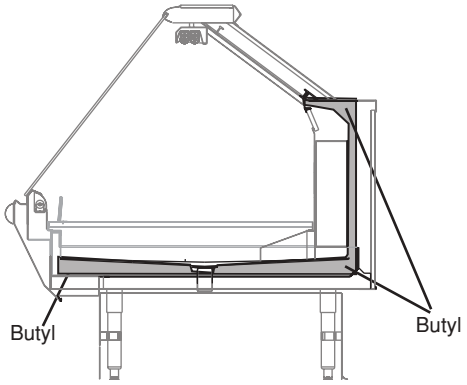

ASCS
Butyl Locations

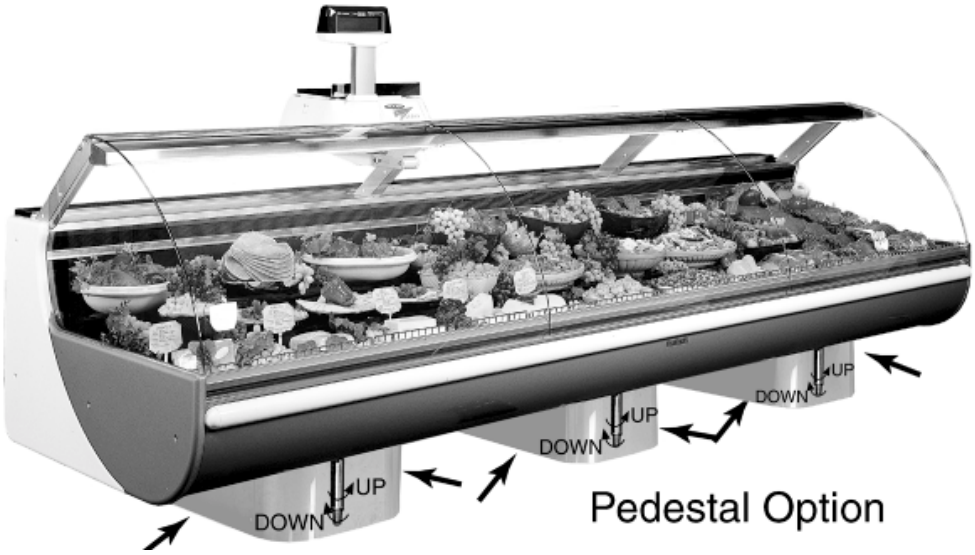

Pedestal Option

Installation (continued)

ATTENTION INSTALLER

It is the contractor's responsibility to install case(s) according to local construction and health codes.

6. Slide second case up to first case snugly. Then level second case to the first case so glass front, bumper and top are flush.

CAUTION

Do not use bolts to pull cases together!

7. To compress butyl at joint, use two Jurgenson wood clamps. Make sure case is level from front to back and side to side on inside bulkheads at joint.
8. Attach sections together via the bolts pictured in the illustration below.

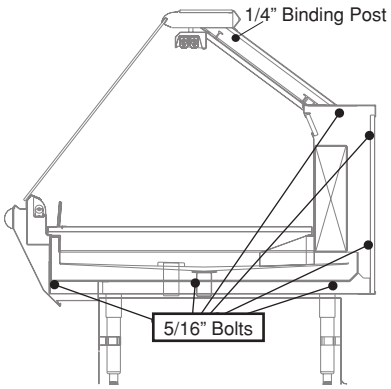

ASCS
Bolt Locations

9. Apply bead of butyl to top of bulkheads and slip on stainless steel bulkhead cap. Also apply silicone to seam between overhead light tubes.
10. Use finger to smooth silicone as thin as possible at masking tape on inside and outside of rear mullion (apply additional silicone if necessary). Remove tape applied on line #4.
11. Remove front, back and end shipping braces.

INSIDE REFRIGERATED WEDGES

Line up taper pins with holes on adjoining case. Turn camlock to lock in. Two camlocks are located at the rear of the case behind the air discharge and behind the lower electrical raceway access panel. Bolt the wedge into the adjoining case in the front. If the adjoining case is refrigerated, the bolt is located under the pans in the front. When the adjoining case is a hot case, the cases are bolted together by mans of a bracket located behind the front panel. Remove the front panel by lifting it up and out..

COMMON END BETWEEN UNLIKE CASES AND HOT CASES

Bolt the end onto the case using the bolts provided in predrilled holes behind the front of the panel through the bracket provided and in the rear behind the rear access panel on the bottom Common ends between refrigerated cases are also bolted together behind the air discharge panel. Remove the discharge panel by lifting up and out.
Hot cases are only bolted in two places, in the rear of the case, behind the access panel, and in the front of the case behind the front panel.

OUTSIDE REFRIGERATED WEDGE:

Taper pin and camlock locations are the same as a standard case.

INSIDE DRY WEDGES

Bolt the wedge into the sides of the adjoining case. Use the bolts provided

INSIDE PEDESTAL WEDGES

Set the wedge on adjoining case's mounting brackets located at the base of the unit, and bolt down. Drive screws provided through the sides of the wedge (4 screws per side), accessible through the back of the wedge.

1. Secure the joint backer located behind the cart bumper support at the joints. To adjust the front panel. Loosen the screws holding the bumper on the case on either side the joint, and slide the extrusion to the center of the joint.
2. Starting from a center case in a lineup or wedge, align the front panels. Front panels can be loosened and adjusted laterally by loosing the screws holding the case bumper channel.

Installation (cont.)

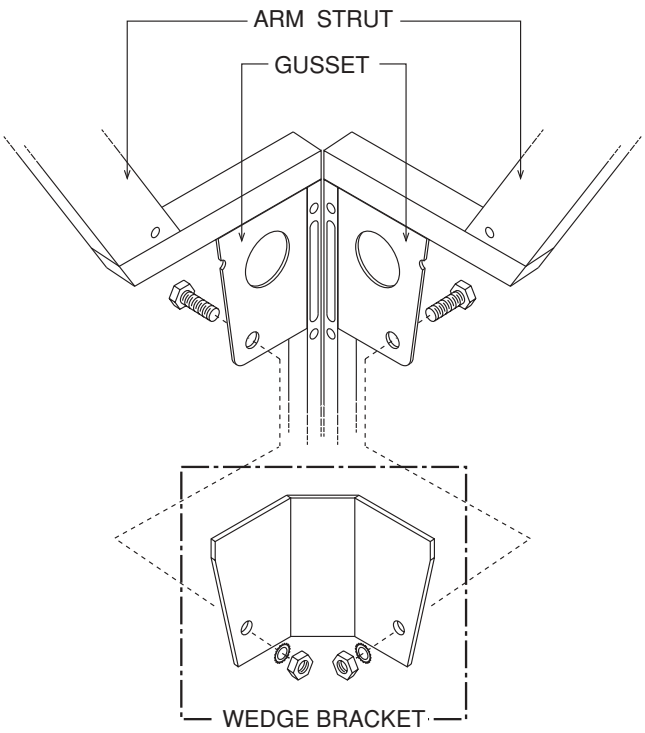

Corner wedges are attached via front and rear camlocks. Use a 7mm Allen wrench to turn the locks. Do not overtighten! Join the top by using a joint bracket (included in joint kit) with 3/8" bolts.

Plumbing

WASTE OUTLET AND P-TRAP

The waste outlet is located off the center of the case on one side allowing drip piping to be run lengthwise under the fixture.

A 1-1/2" P-trap and threaded adapter are supplied with each fixture. The P-trap must be installed to prevent air leakage and insect entrance into the fixture.

NOTE: PVC-DWV solvent cement is recommended. Follow the Hussmann's instructions.

INSTALLING CONDENSATE DRAIN

Poorly or improperly installed condensate drains can seriously interfere with the operation of this refrigerator, and result in costly maintenance and product losses. Please follow the recommendations listed below when installing condensate drains to insure a proper installation:

1. Never use pipe for condensate drains smaller than the nominal diameter of the pipe or P-trap supplied with the case.
2. When connecting condensate drains, the P-trap must be used as part of the condensate drain to prevent air leakage or insect entrance. Store plumbing system floor drains should be at least 14" off the center of the case to allow use of the P-trap pipe section. Never use two water seals in series in any one line. Double P-traps in series will cause a lock and prevent draining.
3. Always provide as much down hill slope ("fall") as possible; 1/8" per foot is the preferred minimum. PVC pipe, when used, must be supported to maintain the 1/8" pitch and to prevent warping.
4. Avoid long runs of condensate drains. Long runs make it impossible to provide the "fall" necessary for good drainage.
5. Provide a suitable air break between the flood rim of the floor drain and outlet of condensate drain. 1" is ideal.
6. Prevent condensate drains from freezing:
   a. Do not install condensate drains in contact with non-insulated suction lines. Suction lines should be insulated with a nonabsorbent insulation material such as Armstrong's Armaflex.
   b. Where condensate drains are located in dead air spaces (between refrigerators or between a refrigerator and a wall), provide means to prevent freezing. The water seal should be insulated to prevent condensation.

Manifold Flush System

GENERAL DESCRIPTION

The flush system generates a high pressure water stream meant to flush most residue buildup from the bottom of the manifold chamber. This is the area that residue builds and expands. Frequency of this periodic maintenance will vary depending on water mineral content and sanitary conditions.

MANUAL FLUSH SYSTEM

Water valve is located on the outside of the case, in the rear, on the left hand side as viewed from the rear.

AUTOMATIC FLUSH SYSTEM

Electrical components are located within the electrical raceway. Electrical components in this area are 115V AC. Step-down transformer is located in the wireway, and is controlled by pump switch. Water flow for flush system is rated at 0.25 GPM at 60 PSI water pressure. Flush nozzle located in the rear of the case.

BASIC SYSTEM OPERATION:

1. Filtered water is supplied to the 115V solenoid valve.
2. At a time of day determined by you, the 115V time clock will energize the solenoid for two (2) minutes.

PROGRAMMING THE TIMER

The circular keypads are positioned to provide a sequential [at for programming. Starting the Prog. button to select a program clockwise to ON/OFF, h for hour, m for minute, and finally Day to select the day for days of the week you wish the flush to operate on. <u>If one of these selections is omitted, the control will flash when the clock or program key is depressed</u>. The missing entry must be completed before the programming can resume.

- A program consists of
  1. ON/OFF
  2. Hour and minute
  3. Day or multiple days on which it is to occur.
- **Res.** is the reset key and will erase the current program.
- The ±**h** key adjusts the set clock time for daylight savings time.
- Military time (24 hr clock) or 12 hour clock may be selected by pressing and holding the h key while depressing the ±**h** key.
- A flashing light indicated a missing selection in the program or a low battery. Check to make sure the timeclock's program is complete (ON/OFF, time, and days)

NOTE: If the h and m keys are held down longer than 2 seconds, the numbers will advance rapidly. Press and hold the (2) day during the following: (*If Daylight Savings Time is In effect, press ±1h first*).

1. Press the Prog. key. [1 2 4 5 6 7 AM– –:– –] will appear in display.
2. Press the key between ON/OFF. The word **ON** will appear.
3. Press **h** to select hour for initial system startup.
4. Press **m** to select the minute the system starts up (30 for 10:30)
5. Select the days desired with the **Day** key.
   1. If the program is to occur every day of the week, ignore **Day** and press **Prog**. key to advance to next program.
   2. If specific, 7 day time control is desired, press **Day** and 1-5 will appear for Mon. - Fri. Pressing **Day** again will display 6,7 for Sat. and Sun.
6. Press the key between ON/OFF to select the cycle termination time. The word **OFF** will appear.
7. Press **h** to select hour the system terminates.
8. Press **m** to select the minute the system terminates.
9. Repeat with the days.
10. Press **Prog.** key and repeat steps 2 thru 11 for additional defrost schedules.
11. After programming press clock key to enter run mode.

***NOTE**: If the days are flashing, it indicates the day of the week was not set when setting the time. The timer cannot be programmed unless the day of the week is entered.*

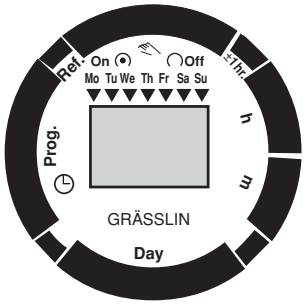

START UP:

1. Manually move time clock to initiate a flush cycle.
2. Observe that flush nozzle is spraying down center of manifold chamber.
3. Set clock to correct time of day.
4. Set trip pins to the "time of day system is to flush" (NOTE: Two [2] flushes per day!)

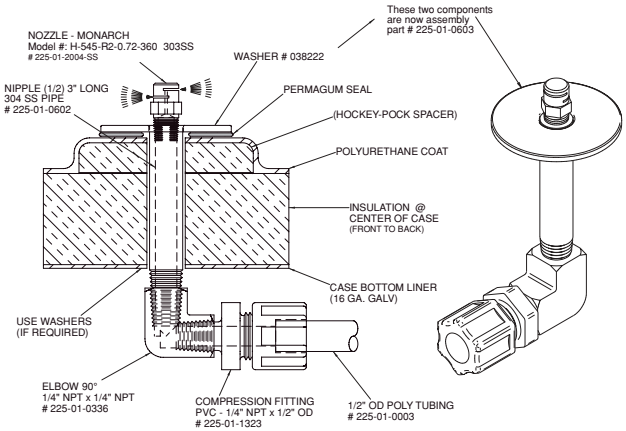

Nozzle and Components with Part Numbers

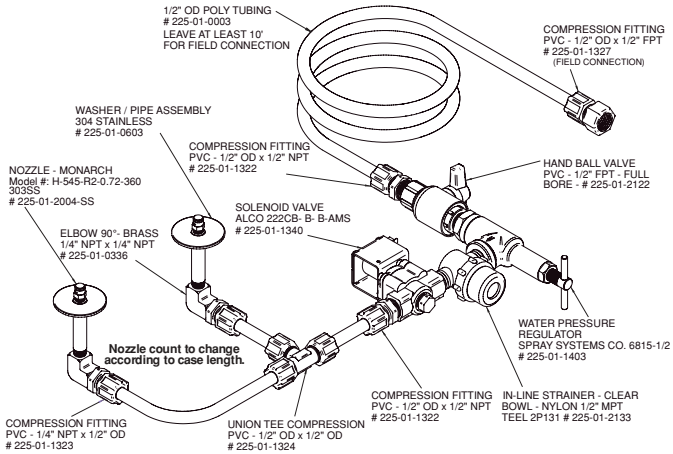

Water Flush Fittings with Part Numbers

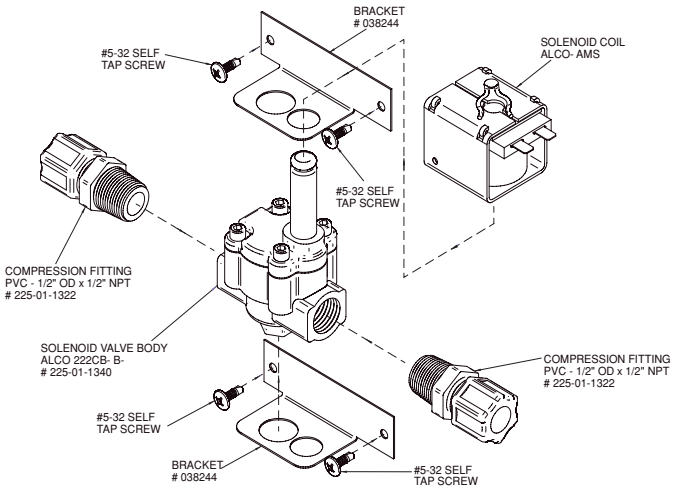

Solenoid Valve and Part Numbers

Humidity System

GENERAL DESCRIPTION

One contributor to the spoilage of fresh meats is dehydration, which causes loss in weight and volume (shrinkage) and product discoloration. As the refrigeration system removes heat from the case, it also removes critical moisture from the air, and any unwrapped products in the case. The Humidity System replaces the moisture in the air, in order to compensate for the moisture taken by the refrigeration system, and disposed of down the drain line. The system is built into the discharge plenum, and mixes moisture laden air with refrigerated air before the air is passed through - and around the product.

The system is constructed almost entirely of PVC pipe, and uses air that is subcooled to approximately the same temperature as the case. The sub-cooling of air inhibits the formation of growth found to be a problem in other humidification systems. Maintenance is almost unnecessary if you follow a few simple rules:

1. Keep the case clean.
2. Keep the water filter clean, and change it every six to twelve months or sooner, depending on the kind of water found in your area.
3. Flush the header every six (6) months, by loosening the connecting "L", then removing it from the case, and flushing with a hose.

IMPORTANT INFORMATION

The ASCS is capable of maintaining superb product quality with the installation of the proper controlling devices. These devices should be set according to the Hussmann's specifications. The humidity system should be properly maintained. Incorrect settings and failure to maintain the humidity system will result in short product life. Below are a few guidelines for optimum performance and product life:

- Set thermostat to cut in at the discharge temperature designated in the case specifications section of the appropriate installation guide or spec. sheet. Maintain the recommended product temperature for Deli, Meat, and Fish. DO NOT set temperature too cold, as this causes product dehydration.
- Temperatures should be achieved by means of a T-Stat and Suction Solenoid at each case. DO NOT use EPR valves, Liquid Line Solenoids, or electronic control devices of any kind. These controls allow temperature swings that cause dehydration and excessive energy consumption.
- Set defrost cycles as listed in the Case Specifications Data for your particular case. The number of defrosts per day should never change. The duration of the defrost cycle may be adjusted to meet conditions present at your location.
- Clean humidity system a minimum of every 90 days for proper system operation.
- Work and rotate product - not to exceed a four (4) hour period.
- At night, turn off case lights, and cover unwrapped product with moistened cheesecloth or fabric towels.
- Keep meat holding box at 32°F.
- Keep meat prep room refrigerated at 55°F.
- Meat Bloom Box (if applicable) should be at 36°F.
- Meat must enter the case at 40°F or below. Product deteriorates rapidly above 40°F.
- Clean, sanitary conditions are required throughout the meat holding, prep, and work areas.
- Do not display product directly within the air discharge
- Turn and rotate meat. The blood works down through the meat over time, which causes the top surface to discolor and dehydrate. Turn meat 3-4 times per day.
- It is not required to remove product from case overnight. Turn off case lights, and cover product with moistened cheesecloth or fabric towel. This helps slow down product dehydration, by taking moisture from the cloth and not the product. This is an old method used by meat shops for many years, as it extends product life.
- Cold coils remove heat and moisture from the case and deposit this as frost onto the coil. Thus a defrost is required to remove this frost. Our humidity system induces moisture into the case, and helps slow down the dehydration process. The only other moisture in the case is that which is in the product. A single level of meat will dry out faster than a fully loaded case with 3-4 levels of meat.
- The colder the case, the faster the product loses its moisture and shelf life. It is very important to maintain a constant, even, correct, product temperature.

HUMIDIFICATION SYSTEM HOOKUPS

Remove the raceway panel on the lower back of the case. The pre-piped water shut-off valve and the water filter are located on the left hand side of the case. The water line (which is a 1/4" OD copper fitting) can be connected to the ball shut-off valve, by means of a compression fitting (supplied). The line should be one size larger than the supply line. The line can then be run from one case to another from within the raceway(s) using Tee connectors. Before connecting the water to the humidity system, it is best to

Humidity System (cont.)

purge the line to flush any debris that may clog the water filter. If the water line requires purging after the cases are hooked together, it is not necessary to check each one. Simply shut ball valves to each humidity system, remove the water line from the last case in the flow, and purge. By doing this as a precautionary measure, you may avoid problems and repeat servicing.

START-UP

Turn on the fan circuit. Check to see if the fan for the humidity system is running. Remove the right hand bottom pan (when facing the front of the case), then the TXV cover. The fan is located up against the right hand side of the case, as viewed from the front, under the fan plenum (see diagram). View the blade, and make sure the fan rotation agrees with the air flow arrows. Turn on the water, by turning the ball valve in the direction of the flow (OFF is at 90° to the direction of flow).

After a few minutes, check the spray header by sliding the honeycomb to the left to expose the discharge tube located on the right hand side of the case (when viewed from the rear), by lifting the 4'-0" section of honeycomb with both ends, until the bottom clears. Pull up and set aside. The spray header will be exposed. Grasp the header and pull it loose from the 90° "L" until you see the misting nozzle, which should be spraying. If not, check the following:

1. Make sure the water is feeding the nozzle.
2. Remove the nozzle, and purge the water.
3. Check strainer at entrance to nozzle.

Reinsert the header into the 90° "L", making sure that the nozzle is in the center of the pipe when totally inserted, and the holes in the header are facing the front of the case at a level angle.

The discharge tube can easily be pulled to service.

MAINTENANCE

- Clean humidity system a minimum of every 90 days for proper system operation.

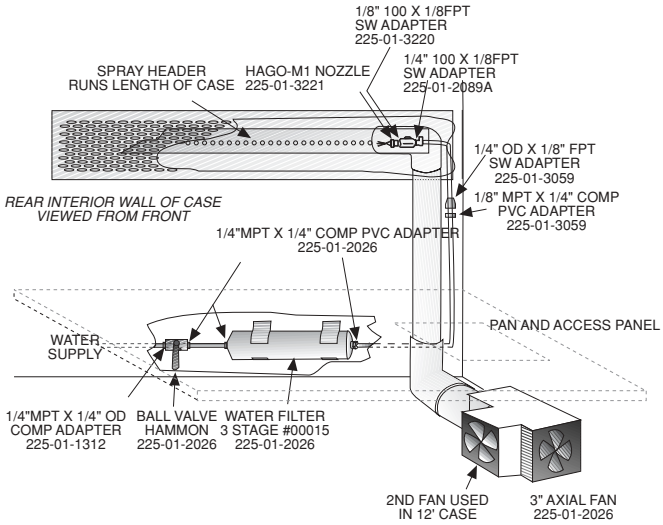

HUMIDITY SYSTEM as viewed from the front.
Note: The axial fans included in the humidity system must be replaced as a unit.

Refrigeration

REFRIGERANT TYPE

The standard refrigerant will be R-22 unless otherwise specified on the customer order. Check the serial plate on the case for information.

PIPING

The refrigerant line outlets are located under the case. Locate first the electrical box, the outlets are then on the same side of the case, but at the opposite end. Insulate suction lines to prevent condensation drippage.

REFRIGERATION LINES

LIQUID	SUCTION
1/2" O.D.	5/8" O.D.

NOTE: The standard coil is piped at 5/8" (suction); however, the store tie-in may vary depending on the number of coils and the draw the case has. Depending on the case setup, the connecting point in the store may be 5/8", 7/8", or 1 1/8". Refer to the particular case you are hooking up.

Refrigerant lines should be sized as shown on the refrigeration legend furnished by the store.

Install *P-traps* (oil traps) at the base of all suction line vertical risers.

Pressure drop can rob the system of capacity. To keep the pressure drop to a minimum, keep refrigerant line run as short as possible, using the minimum number of elbows. Where elbows are required, use long radius elbows only.

CONTROL SETTINGS

See the "Case Specs" section of this guidebook for the appropriate settings for your merchandiser. Maintain these parameters to achieve near constant product temperatures. Product temperature should first be measured in the morning, after having been refrigerated overnight. For all multiplexing, defrost should be time terminated. Defrost length and frequency should as directed in the Case Specifications section of this guide. The number of defrosts per day should never change. The duration of the defrost cycle may be adjusted to meet conditions present at your location.

ACCESS TO TX VALVES AND DRAIN LINES

MECHANICAL - Remove product from case. Remove pans. TX valve (mechanical only) and drain are located under the pans within the case.

ELECTRONIC - The electronic expansion valve master and slave cylinder(s) are located within the electrical access panel(s) in the rear of case. Rear panels lift up and out.

NOTE: Duplex receptacles must be detached before removing rear panels.

ELECTRONIC EXPANSION VALVE *(OPTIONAL)*

A wide variety of electronic expansion valves and case controllers can be utilized. Please refer to EEV and controller Hussmann's information sheet. Sensors for electronic expansion valves will be installed on the coil inlet, coil outlet, and in the discharge air. (Some supermarkets require a 4th sensor in the return air). Case controllers will be located in the electrical raceway or under the case.

THREE THERMOSTATIC EXPANSION VALVES

ALCO balanced port expansion valves are furnished as standard equipment, unless otherwise specified by customer.

EXPANSION VALVE ADJUSTMENT

Expansion valves must be adjusted to fully feed the evaporator. Before attempting any adjustments, make sure the evaporator is either clear or very lightly covered with frost, and that the fixture is within 10°F of its expected operating temperature.

After case has been brought to running temperature, tighten glass screws along clamshell.

MEASURING THE OPERATING SUPERHEAT

1. Determine the suction pressure with an accurate pressure gauge at the evaporator outlet.
2. From a refrigerant pressure temperature chart, determine the saturation temperature at the observed suction pressure.
3. Measure the temperature of the suction gas at the thermostatic remote bulb location.
4. Subtract the saturation temperature obtained in step No. 2 from the temperature measured in step No. 3.
3. The difference is superheat.
5. Set the superheat for 5°F - 7°F.

T-STAT LOCATION

T-Stats are located in the electrical section; behind the rear panel, on the right-hand side of the case (facing the back of the case).

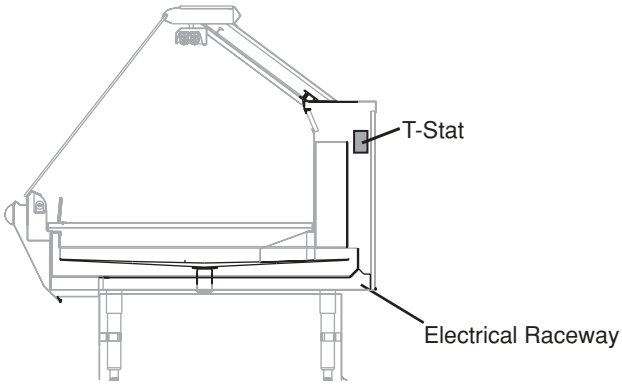

Electrical

WIRING COLOR CODE

GREEN	GROUND
PURPLE	ANTI-SWEAT
ORANGE	LIGHTS
YELLOW	RECEPTACLE
RED / BLACK	T-STAT /SOLENOID230V
BLACK / WHITE	T-STAT / SOLENOID 115V
BROWN	FAN MOTORS

CASE MUST BE GROUNDED

NOTE: Refer to label affixed to case to determine the actual configuration as checked in the "TYPE INSTALLED" boxes.

DANGER

BEFORE SERVICING

Always Disconnect Electrical Power at the Main Disconnect when servicing or replacing any electrical component.

This includes (but not limited to) Fans, Heaters, Thermostats, and Lights.

ELECTRICAL CIRCUIT IDENTIFICATION

Standard lighting for all models will be full length fluorescent lamps located within the case at the top.

The switch controlling the lights, the plug provided for digital scale, and the thermometer are located at the rear of the case mullion.

The receptacle that is provided on the exterior back of these models is intended for computerized scales with a five amp maximum load, not for large motors or other high wattage appliances. It should be wired to a dedicated circuit.

CASE-TO CASE CONNECTORS

HUSSMANN/CHINO now provides "CASE-TO-CASE" locking electrical connector fittings on the ASCS service cases. These connectors greatly simplify field installation thereby saving time and electrical installation costs.

NOTE: The total case electrical draw must not exceed 30 Amps ampacity at 115V in one connected lineup.

ELECTRICAL SERVICE RECEPTACLES (WHEN APPLICABLE)

The receptacles located on the exterior of the merchandiser are intended for scales and lighted displays. They are not intended nor suitable for large motors or other external appliances.

FIELD WIRING AND SERIAL PLATE AMPERAGE

Field wiring must be sized for component amperes printed on the serial plate. Actual ampere draw may be less than specified. Field wiring from the refrigeration control panel to the merchandisers is required for refrigeration thermostats. Most component amperes are listed in the "Case Specs" section, but always check the serial plate.

BALLAST LOCATION

Ballasts are located within the access panel that runs the length of the rear of the case. Refer to diagram on page 6.

WIRING AND SERIAL PLATE AMPERAGE

Field wiring must be sized for component amperes stamped on the serial plate. Actual ampere draw may be less than specified. Field wiring from the refrigeration control panel to the merchandisers is required for refrigeration thermostats. Most component amperes are listed in the "Case Specs" section, but always check the serial plate.

ASHRAE COLOR CODE

NOTE: All other manufacturers; no known sensor codes

Case Control Systems	SENSOR COLORS		
Manufacturer ® >		EIL	CPC
Location			
Coil Inlet	Color	Blue	Blue
	Part#	225-01-1755	225-01-3255
Coil Outlet	Color	Red	Red
	Part#	225-01-1757	225-01-3123
Discharge Air	Color	Green	Green
	Part#	225-01-1756	225-01-3260
Return Air	Color	Purple	Green
	Part#	225-01-1758	225-01-3260
Defrost Term.	Color	White	Orange
	Part#	225-01-0650	225-01-3254
Liquid Line	Color	White	Blue
	Part#	225-01-0650	225-01-3255

JOINT TRIM

After cases have been leveled and joined, and refrigeration, electrical, and waste piping work completed, install the splashguards. Fasten along the top edge, or center, with #10 X 3/3" sheet metal screws.

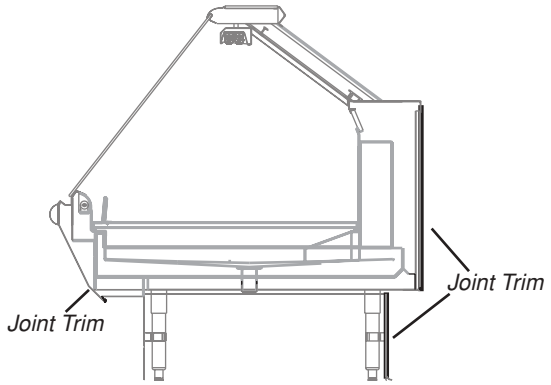

ASCS
Butyl Locations

DO NOT SEAL JOINT TRIM TO FLOOR!

BUMPER INSTALLATION TIPS

1. Start to attach the bumper at one end of the lineup, preferably on a straight case.
2. Push the end of the bumper into the bumper channel firmly. This may be difficult if bumper is cold.
3. Bend the bumper backwards to open and guide it forward onto the bumper channel.
4. An inside bumper miter must be cut on wedges.
5. Loose ends on miters must be anchored with screws on the bottom edge.
6. The top and bottom edges of the bumper must be firmly seated into the retainer by applying with a rubber mallet (not by hand).
7. The bumper should be struck by the mallet at a slight angle that forces the bumper back into itself to prevent stretching. The installation can be made easier by applying a paraffin block to the retainer grooves.

INSTALLING SPLASHGUARD

After merchandisers have been leveled and joined, and all drip piping, electrical and refrigeration work has been completed, install the splashguards. Splashguards may be sealed to the floor using a vinyl cove base trim. The size of trim needed will depend on how much the floor is out of level. NOTE: The splashguard must be removable to allow access to components behind it.

1. Remove all dirt, wax, debris, etc. from the area of the splashguard to ensure a secure adhesion.
2. Apply a good contact cement to the trim, allowing a proper dry time.
3. Install trim to the splashguard so that it is flush with the floor.

STOCKING

Improper temperature and lighting will cause serious product loss. Discoloration, dehydration and spoilage can be controlled with proper use of the equipment and handling of product. Product temperature should always be maintained at a constant and proper temperature. This means that from the time the product is received, through storage, preparation and display, the temperature of the product must be controlled to maximize life of the product. Hussmann cases were not designed to "heat up" or "cool down" product—but rather to maintain an item's proper temperature for maximum shelf life. To achieve the protection required always:

1. Minimize processing time to avoid damaging temperature rise to the product. Product should be at proper temperature.
2. Keep the air in and around the case area free of foreign gasses and fumes or food will rapidly deteriorate.
3. Maintain the display merchandisers temperature controls as outlined in the refrigerator section of this manual.
4. Do not place any product into these refrigerators until all controls have been adjusted and they are operating at the proper temperature. Allow merchandiser to operate a minimum of six (6) hours before stocking with any product.
5. When stocking, never allow the product to extend beyond the recommended load limit. **Air discharge and return air flue must be unobstructed at all times to provide proper refrigeration.**
6. There are vents located at the base of the front of the glass, just above the front rail. These vents supply a continuous, gentle flow of air across the front glass which inhibits condensation. **Do not place any signs or other restrictive objects on the front of the refrigerator that will block these vents.**
7. Keep the service doors closed (when applicable). Refrigeration performance will be seriously affected if left open for a prolonged period of time.
8. Avoid the use of supplemental flood or spot lighting. Display light intensity has been designed for maximum visibility and product life at the factory. The use of higher output fluorescent lamps (H.O. and V.H.O.), will shorten the shelf life of the product.
9. In the Deli, Meat and Fish cases, completely cover the product each night with a clean damp cloth or butcher paper (never use plastic, as it does not allow for proper circulation). Make sure the cloth or paper is in direct contact with the product.
10. Turn and rotate the meat fairly often. The blood which gives the pink color works its way downward with time.
11. Cold coils remove heat and moisture from the case and deposit this as frost onto the coil. Thus, a defrost is required. Our humidity system induces moisture into the case and helps slow down the dehydration process. The only other moisture within the case is that in the product itself. A single level of meat will dry out faster than a fully loaded case of 3–4 levels of meat.

IMPORTANT STEPS

1. Do not set temperature too cold, as this causes product dehydration. **Product Temperature: 33°–35°!** Set thermostat to cut in at 28° discharge air. Meat holding box: 32°. Meat prep room: 55°. Meat bloom box: 36°. Process the meat to enter case at 40° or below. Product deterioration is very rapid above 40°.
2. Temperature control should be by means of a T-Stat and Suction Stop Solenoid at each case. DO NOT use EPR valves, Liquid line solenoids or electronic control devices of any kind, as these allow temperature swings causing dehydration and excessive energy consumption.
3. Product should be worked and rotated on a regular basis, not to exceed a 4 hour period.
4. At night, turn off case lights and cover the product with a damp (not wet) cloth similar to cheese cloth (etc.). This should be washed out in the morning and kept in a walk-in box during the day—so that it is cool and moist when covering the product.
5. Discharge air temperature should be approximately 26°F, with between 150-200 FPM air velocity. Do not display product directly within the air discharge.
6. Clean humidity system a minimum of every 90 days for proper system operation.

CASE CLEANING

Long life and satisfactory performance of any equipment are dependent upon the care given to it. To insure long life, proper sanitation and minimum maintenance costs, the refrigerator should be thoroughly cleaned frequently. SHUT OFF FAN DURING CLEANING PROCESS. It can be unplugged within the case, or shut off entire case at the source. The interior bottom may be cleaned with any domestic soap or detergent based cleaners. Sanitizing solutions will not harm the interior bottom, however, these solutions should always be used according to the Hussmann's directions. It is essential to establish and regulate cleaning procedures. This will minimize bacteria causing discoloration which leads to degraded product

appearance and significantly shortening product shelf life. *Soap and hot water are not enough to kill this bacteria. A sanitizing solution must be included with each cleaning process to eliminate this bacteria.*

1. Scrub thoroughly, cleaning all surfaces, with soap and hot water.
2. Rinse with hot water, but do not flood.
3. Apply the sanitizing solution according to Hussmann's directions.
4. Rinse thoroughly.
5. Dry completely before resuming operation.

CLEANING GLASS AND MIRRORS

Only use a soft cloth and mild glass cleaner for cleaning any glass or mirrored components. Be sure to rinse and/or dry completely.

Never use hot water on cold glass surfaces! It may shatter and cause serious injury! Allow glass surfaces to warm first.

PRECAUTION

CLEANING PRECAUTIONS

WHEN CLEANING:

- **Do Not Use High Pressure Hoses**
- **Do Not Introduce Water Faster than Waste Outlet can Drain**
- **Never Use a Cleaning or Sanitizing Solution that has an OIL BASE (these will dissolve the butyl sealants) or AMMONIA BASE (this will corrode the copper components of the case)**

TO PRESERVE THE ATTRACTIVE FINISH:

- **Do Use Water and a Mild Detergent for the Exterior Only!**
- **Do Not Use Abrasives or Steel Wool Scouring Pads (these will mar the finish)**

NON-GLARE GLASS

The high optical clarity of this glass is possible due to special coatings on the glass surface itself. To preserve this coating and the optical clarity, keep the glass clean.

Water is the only solution recommended for use in cleaning non-glare glass. The damage to the glass from improper, caustic solutions is irreparable.

In addition to cleaning the glass with the recommended product, there are precautions that should be taken when working and cleaning the inside of the case.

- When cleaning the inside of the cases, we recommend that the glass be fully opened and covered to prevent solutions from splashing onto the glass and ruining the coating on the inside.

PLEXIGLASS and ACRYLIC CARE

Improper cleaning not only accelerates the cleaning cycle but also degrades the quality of this surface. Normal daily buffing motions can generated static cling attracting dust to the surface. Incorrect cleaning agents or cleaning cloths can cause micro scratching of the surface, causing the plastic to haze over time.

CLEANING

Hussmann recommends using a clean damp chamois, or a paper towel marked as "*dust and abrasive free*" with **210®** **Plastic Cleaner and Polish** available by calling Sumner Labs at **1-800-542-8656**. Hard, rough cloths or paper towels will scratch the acrylic and should not be used.

ANTISTATIC COATINGS

The **210®** has proven to be very effective in not only cleaning and polishing the Plexiglass surface, but also providing antistatic and anti-fog capabilities. This product also seals pores and provides a protective coating.

IMPORTANT INFORMATION

FOR PROMPT SERVICE

When Contacting the Factory for support, Be sure to have the Case MODEL and SERIAL NUMBER Handy.

This Information is on a plate located on the case itself.

DANGER

BEFORE SERVICING

Always Disconnect Electrical Power at the Main Disconnect when servicing or replacing any electrical component.

This includes (but not limited to) Fans, Heaters, Thermostats, and Lights.

REPLACING FLUORESCENT LAMPS

Fluorescent lamps are furnished with a shatterproof protective coating. The same type of lamp with protective coating must be used if replaced.

HUSSMANN®

ENCAPSULITE

SHATTERPROOF COATING - SA 10645

Complies with FDA USDA & OSHA Regulations

NSF

for replacement call:

1-800-395-9229

→ Turn switch off then on after replacing bulb ←

EVAPORATOR FANS

The evaporator fans are located at the center front of these merchandisers directly beneath the display pans. *Should fans or blades need servicing, always replace fan blades with the raised embossed side of the blade TOWARD THE MOTOR.*

COPPER COILS

The copper coils used in Hussmann merchandisers may be repaired in the field. Materials are available from local refrigeration wholesalers.

Hussmann recommends using #15 Sil-Fos for repairs.

TIPS and TROUBLESHOOTING

Before calling for service, check the following:

1. Check electrical power supply to the equipment for connection.
2. Check fixture loading. Overstocking case will affect its proper operation.
3. If frost is collecting on fixture and/or product, check that Humidity Control is working properly, and that no outside doors or windows are open—allowing moisture to enter store.

PRECAUTION

CLEANING PRECAUTIONS

WHEN CLEANING:

- **Do Not Use High Pressure Hoses**
- **Do Not Introduce Water Faster than Waste Outlet can Drain**
- **Never Use a Cleaning or Sanitizing Solution that has an OIL BASE (these will dissolve the butyl sealants) or AMMONIA BASE (this will corrode the copper components of the case)**

TO PRESERVE THE ATTRACTIVE FINISH:

- **Do Use Water and a Mild Detergent for the Exterior Only!**
- **Do Not Use Abrasives or Steel Wool Scouring Pads (these will mar the finish)**

Maintenance (continued)

NOTE: Before making any of the recommended adjustments, Verify that the case(s) have been leveled properly.

Tech/glassadj/970602 tn

Adjust glass Up and Down (vertically)

A

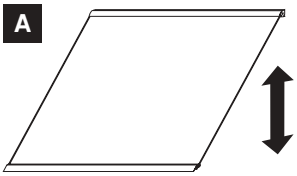

1. Remove top glass and panel enclosing mini-top hardware.
2. Lift open glass panel(s) and relieve tension on hinge.
3. Loosen hex screw (1/4" allen). Remove chrome access cap in order to hold nut plate.
4. Add or remove shims as needed. (see note on shims below)
5. Close glass panel(s) and check alignment Retighten hex screw and reinstall removed components.

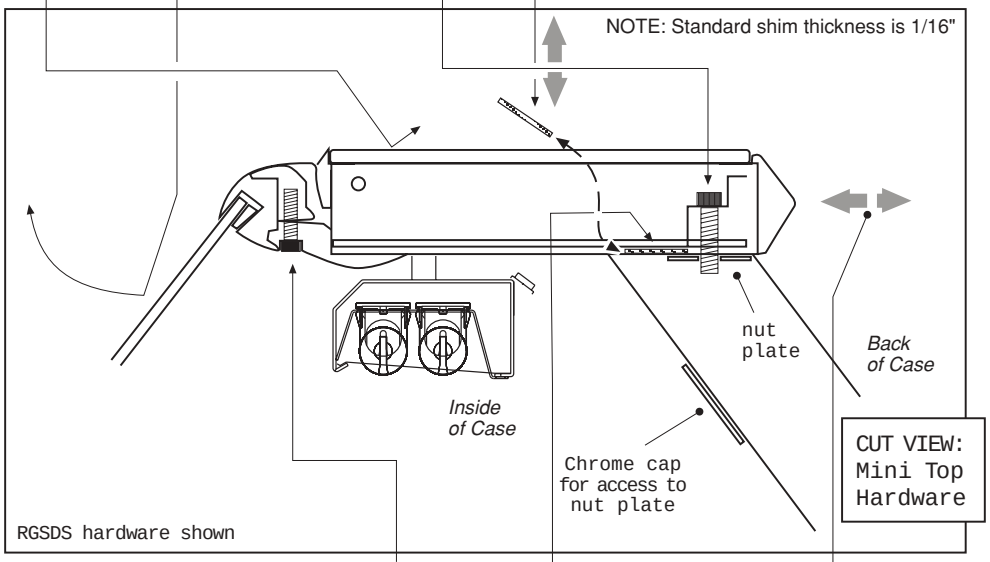

Adjust glass Side to Side (horizontally)

B

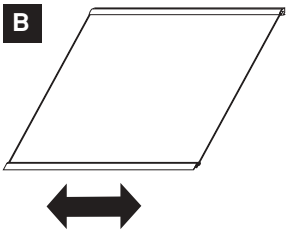

1. Remove top glass enclosing mini-top hardware.
2. Lift open glass panel(s) and relieve tension on hinge.
3. Loosen (4mm) screw slightly. one at each hinge
4. Move panel as required Retighten components

Adjust glass Front to Back

C

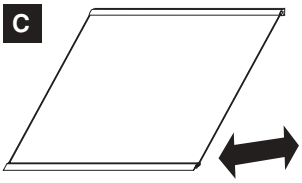

1. Remove top glass and panel enclosing mini-top hardware.
2. Estimate amount of adjustment and make pencil mark on the mini-cam.
3. Lift open glass panel(s) and relieve tension on hinge.
4. Loosen hex screw (1/4" allen) slightly. Remove chrome access plate in order to hold nut plate.
5. Slide the mini-top forward or backward to the mark in step 2. Check alignment of glass. Retighten components.

REF. MODEL NUMBER / CASE LENGTH		BTU REQ'D PER FT.	TEMPERATURE EVAP TMP	TEMPERATURE AVG PROD TMP	TEMPERATURE DISC TMP	DISCHG. AIR VELOC @FPM	T-STAT/ CUT IN SETTINGS	TYPE OF COIL	FAN SIZE TYPE & USE	NUMBER OF MOTORS	DEFROST FREQ. & DURATION	115 V. ELECTRICAL CIRCUITS AIR SWEEP FANS/WARMER (OPTIONAL)	STD. FANS	WARMERS	LIGHTS	HUMIDITY FANS	SELF CONTA INED UNIT DATA / SEE CROSS SELF CONTAINED LOW PRESSURE CONTROL & SETTINGS	H.P.	VOLTS	AMPACITY
ASCS																				
4'	Deli	650	20°	36°	28°	250	28°	Forced	Airsweep - 4½" Axial	1	36 min.	0.18	0.36	.35	1.08	0.16	30# Out	⅓	115	10.9
	Meat/Fish		33°	26°	26°		26°	Air	Evap fans - 8" x 15°	1	(4)	1.68					50# In			
									Humidity 3 ¼" Axial	1										
6'	Deli	650	20°	36°	28°	250	28°	Forced	Airsweep - 4½" Axial	2	36 min.	0.36	0.72	.52	1.62	0.16	30# Out	½	115	19.9
	Meat/Fish		33°	26°	26°		26°	Air	Evap fans - 8" x 15°	2	(4)	1.68					50# In			
									Humidity 3 ¼" Axial	1										
8'	Deli	650	20°	36°	28°	250	28°	Forced	Airsweep - 4½" Axial	3	36 min.	0.54	0.72	.70	1.62	0.16	30# Out	¾	208/	8.7
	Meat/Fish		33°	26°	26°		26°	Air	Evap fans - 8" x 15°	2	(4)	2.24					50# In		230	
									Humidity 3 ¼" Axial	1										
10'	Deli	650	20°	36°	28°	250	28°	Forced	Airsweep - 4½" Axial	3	36 min.	0.54	1.08	.87	2.70	0.32	30# Out	1	208/	13.0
	Meat/Fish		33°	26°	26°		26°	Air	Evap fans - 8" x 15°	3	(4)	2.80					50# In		230	
									Humidity 3 ¼" Axial	2										
12'	Deli	650	20°	36°	28°	250	28°	Forced	Airsweep - 4½" Axial	3	36 min.	0.54	1.08	1.04	2.70	0.32	30# Out	1	208/	13.0
	Meat/Fish		33°	26°	26°		26°	Air	Evap fans - 8" x 15°	3	(4)	3.36					50# In		230	
									Humidity 3 ¼" Axial	2										
ASCS for Bakery																				
4'		-	-	-	-	-	-	-	8" x 15° used for air circulation	1	-	-	.6	-	1.22					
6'		-	-	-	-	-	-	-	8" x 15° used for air circulation	2	-	-	1.2	-	1.83					
8'		-	-	-	-	-	-	-	8" x 15° used for air circulation	2	-	-	1.2	-	1.83					
10'		-	-	-	-	-	-	-	8" x 15° used for air circulation	3	-	-	1.8	-	3.05					
12'		-	-	-	-	-	-	-	8" x 15° used for air circulation	3	-	-	1.8	-	3.05					
ASCS Wedges																				
45°	Inside	Load on parent case																		
	Outside	Load on parent case																		
90°	Inside - Deli	2670	20°	36°	28°	250	28°	Forced	Anti Sweat 4½" Axial	1	36 min.	0.18	0.6	-	0.61					
	Inside - Meat		34°	26°		26°	26°	Air	Evap fans - 8" x 15°	1	(4)	1.68								
90°	Outside - Deli	2670	20°	36°	28°	250	28°	Forced	Anti Sweat 4½" Axial	1	36 min.	0.18	0.6	-	0.61					
	Outside - Meat		34°	26°		26°	26°	Air	Evap fans - 8" x 15°	1	(4)	1.68								

NOTE: Case temperature is controlled by a factory installed thermostat and suction solenoid (excluding self contained cases), no other controls are recommended or suported.
The total case electrical draw must not exceed 30 Amps Ampacity @ 115 Volts in one connected lineup.

HUSSMANN CHINO CASE SPECIFICATIONS 0201

INQUIRIES? **Technical** (800) 395-9229 X2133 **Service** (800) 395-2320 **Parts and Warranty Information** (800) 395-9229 X2131

Note: These merchandisers are designed for use in stores where temperature and humidity do not exceed 75°F and 55% R.H. (We reserve the right to change or revisespecifications and product design in connection with any features of our products. Such changes do not entitle the buyer to corresponding changes, improvements, additions, or replacement of equipment previously sold or shipped).

Electrical Schematics

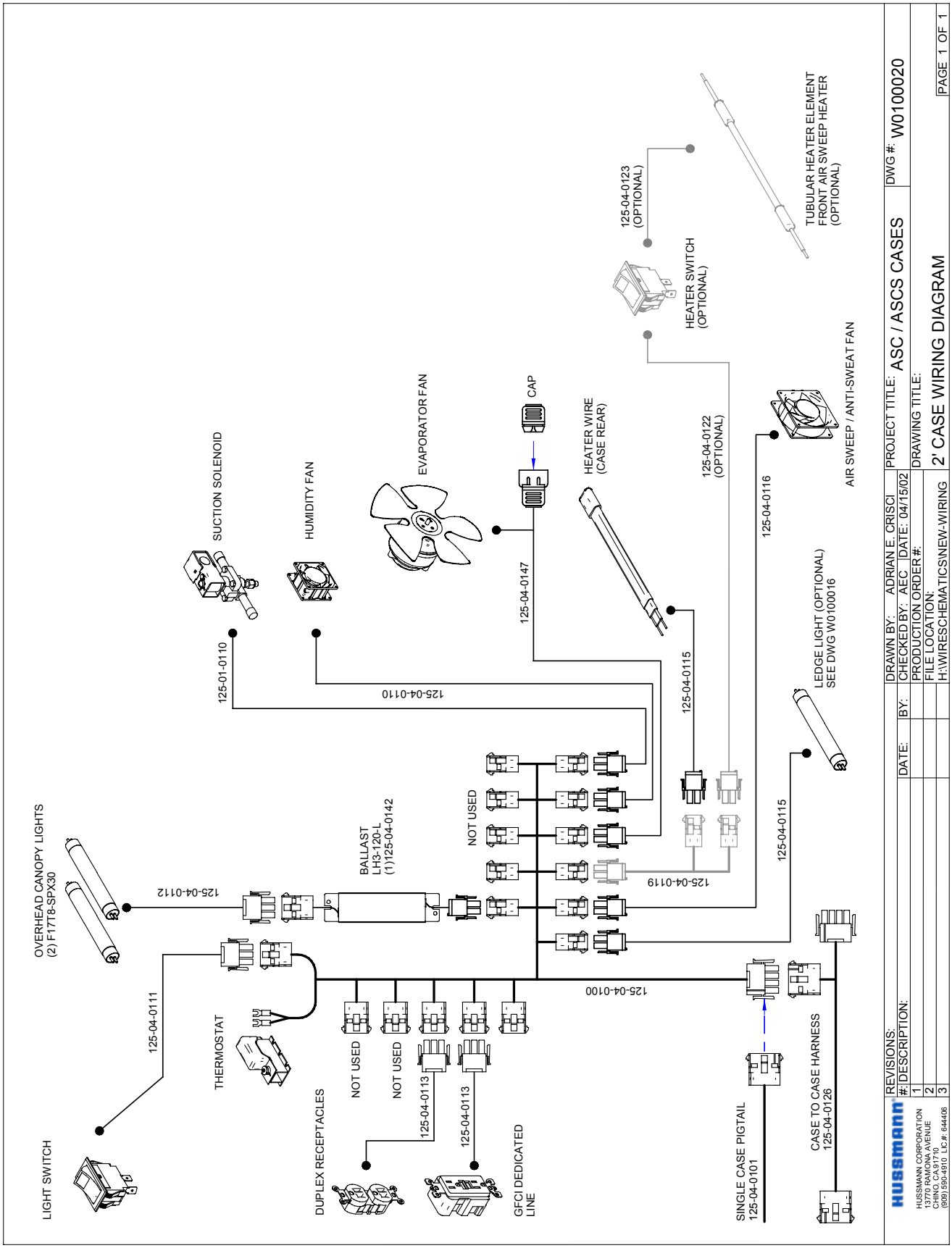

Electrical Schematics Continued

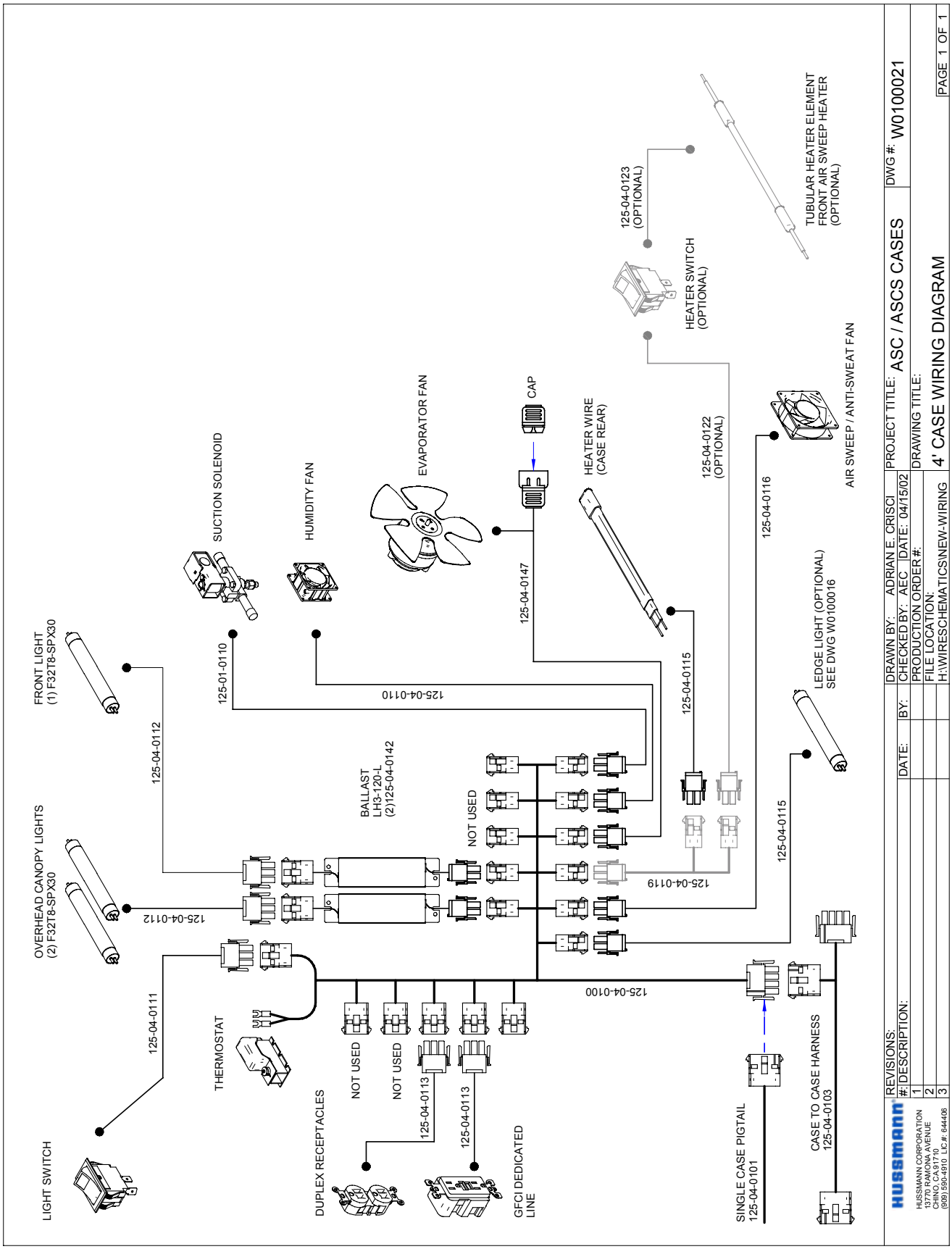

Electrical Schematics Continued

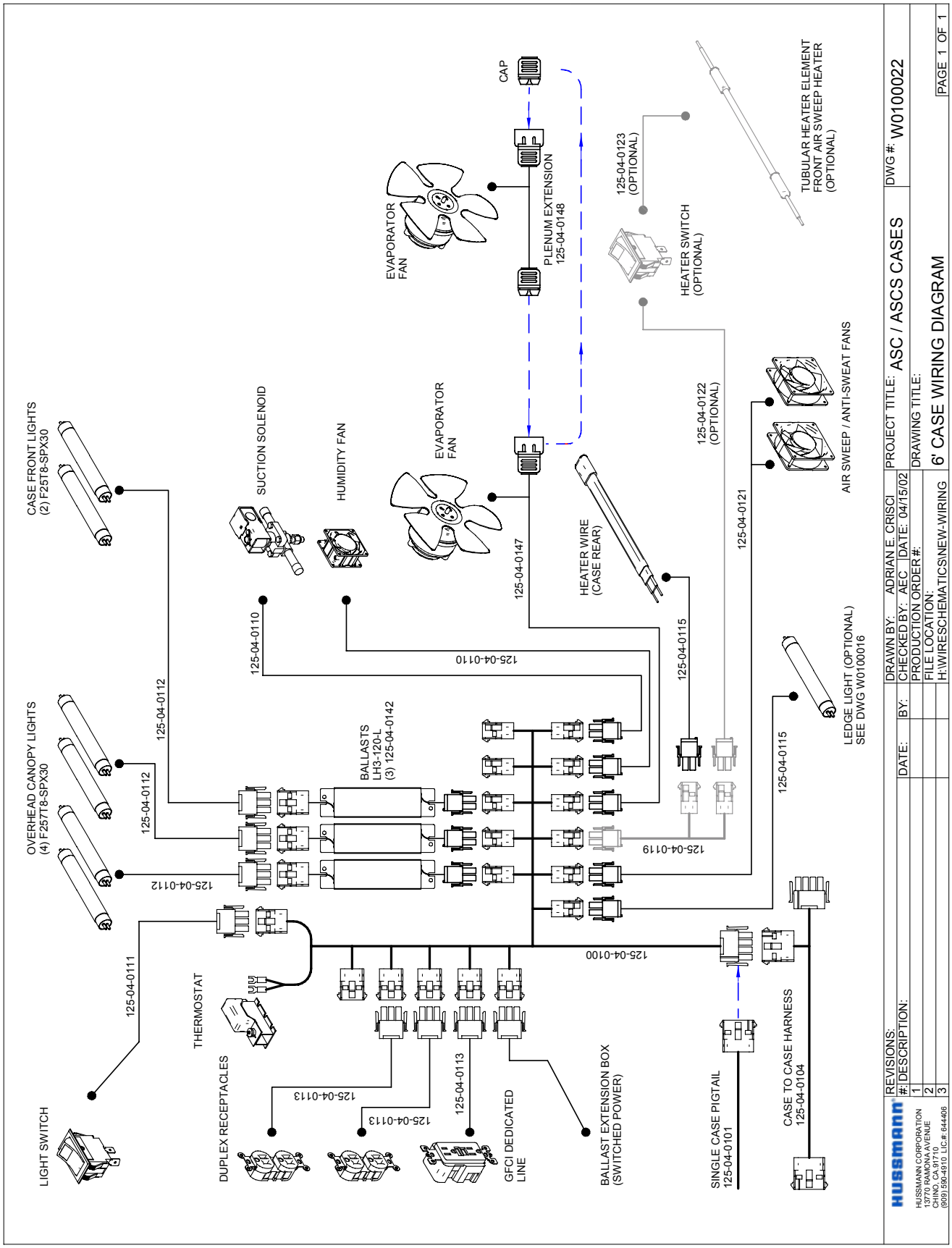

Electrical Schematics Continued

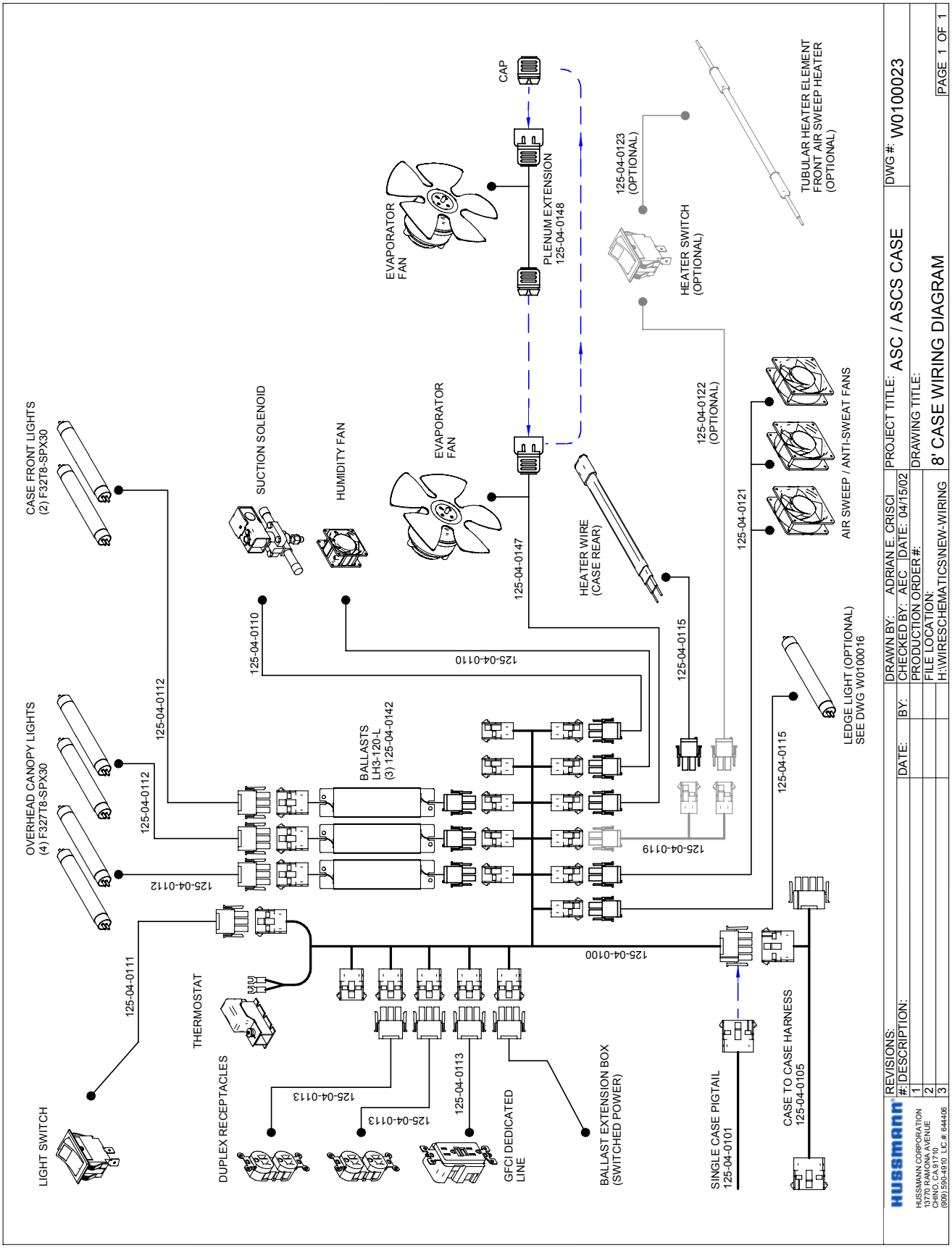

Electrical Schematics Continued

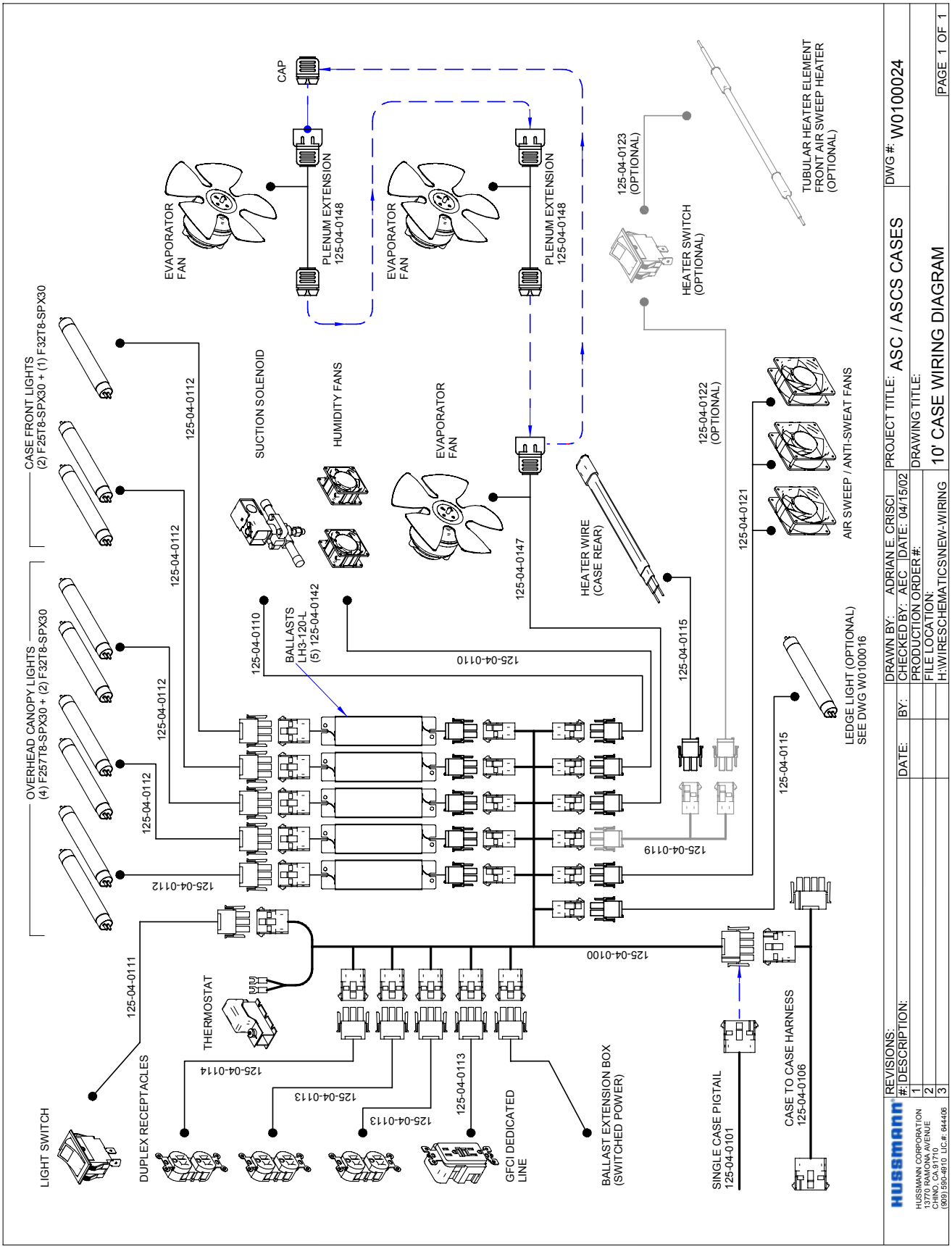

Electrical Schematics Continued

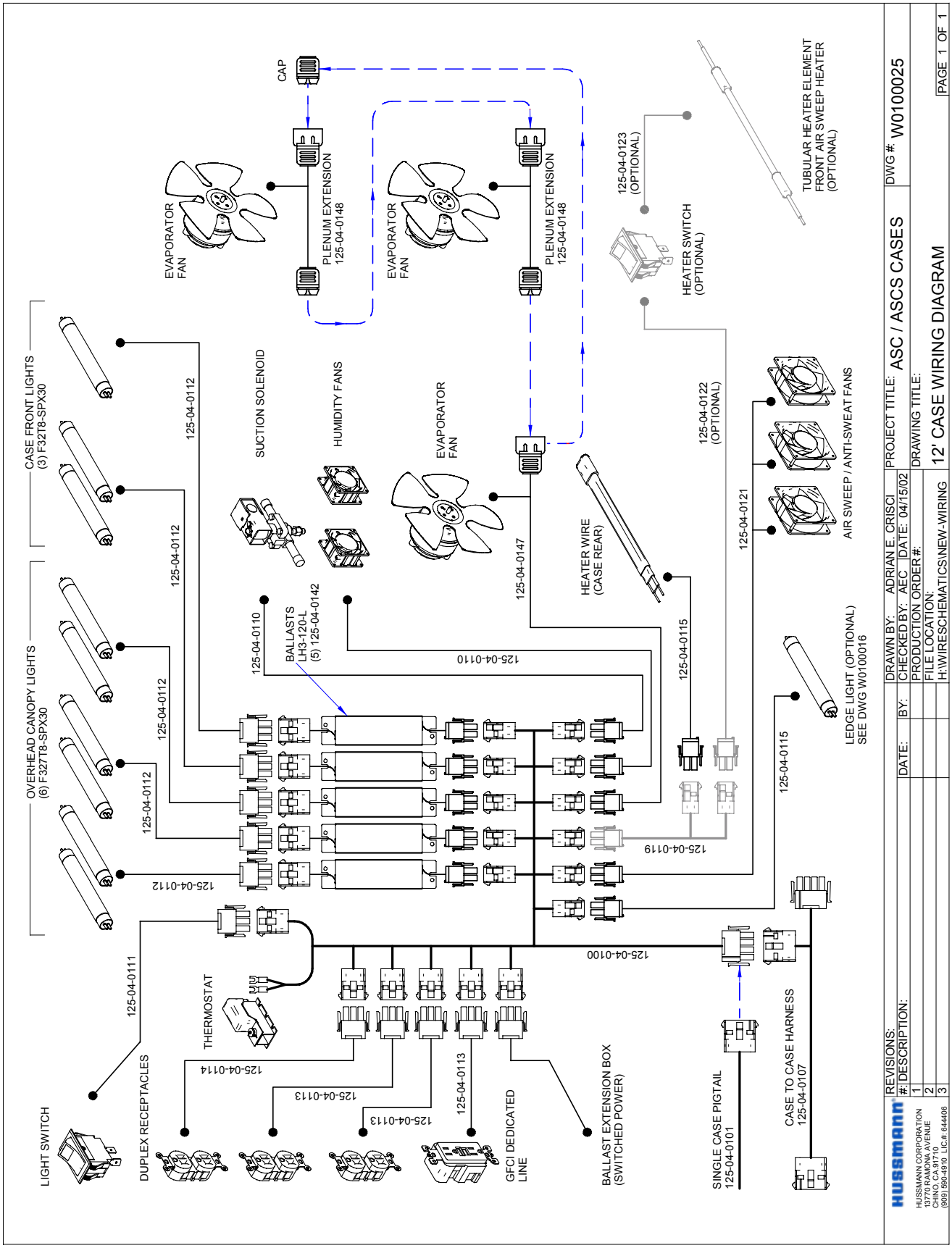

Electrical Schematics Continued

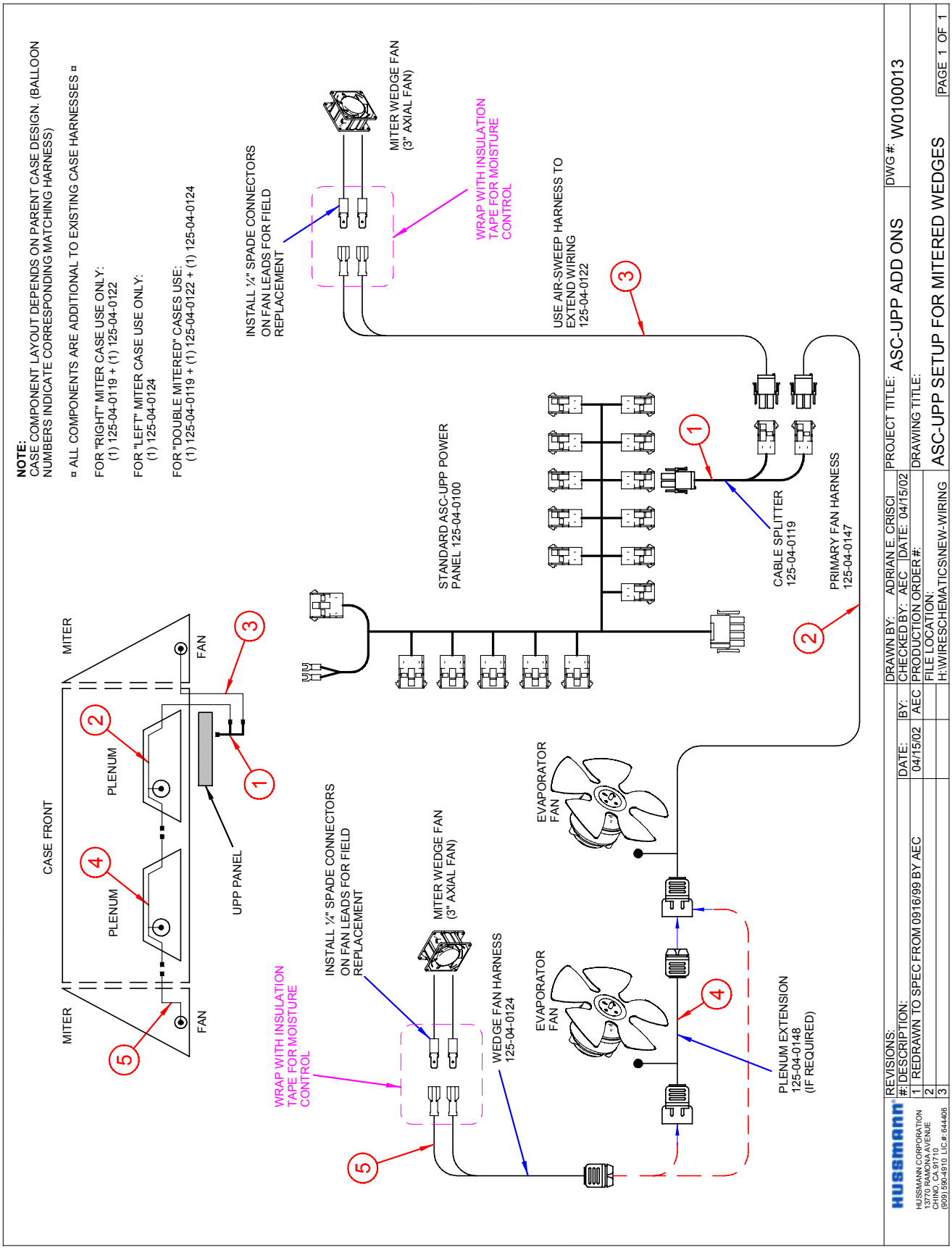

Electrical Schematics Continued

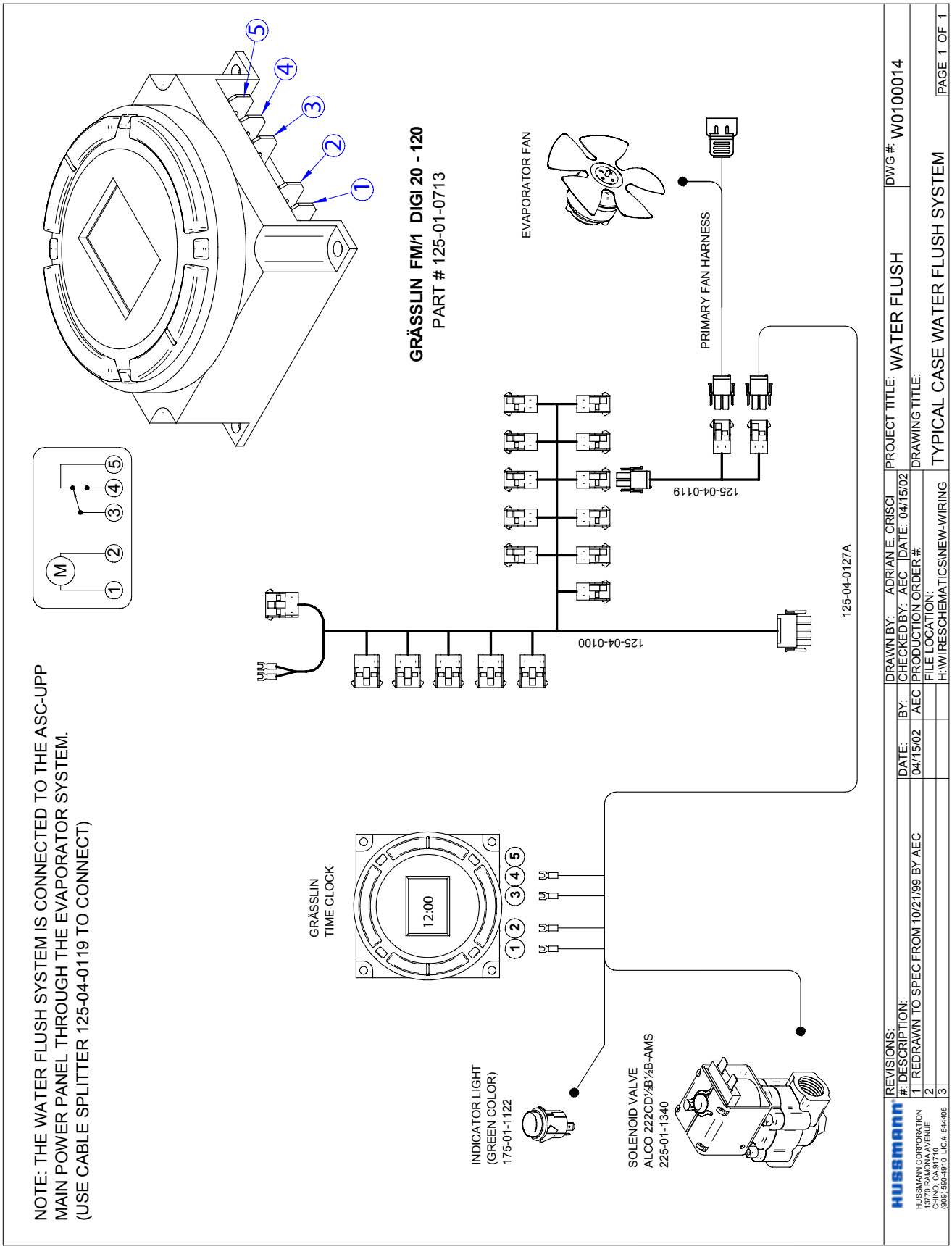

Electrical Schematics Continued

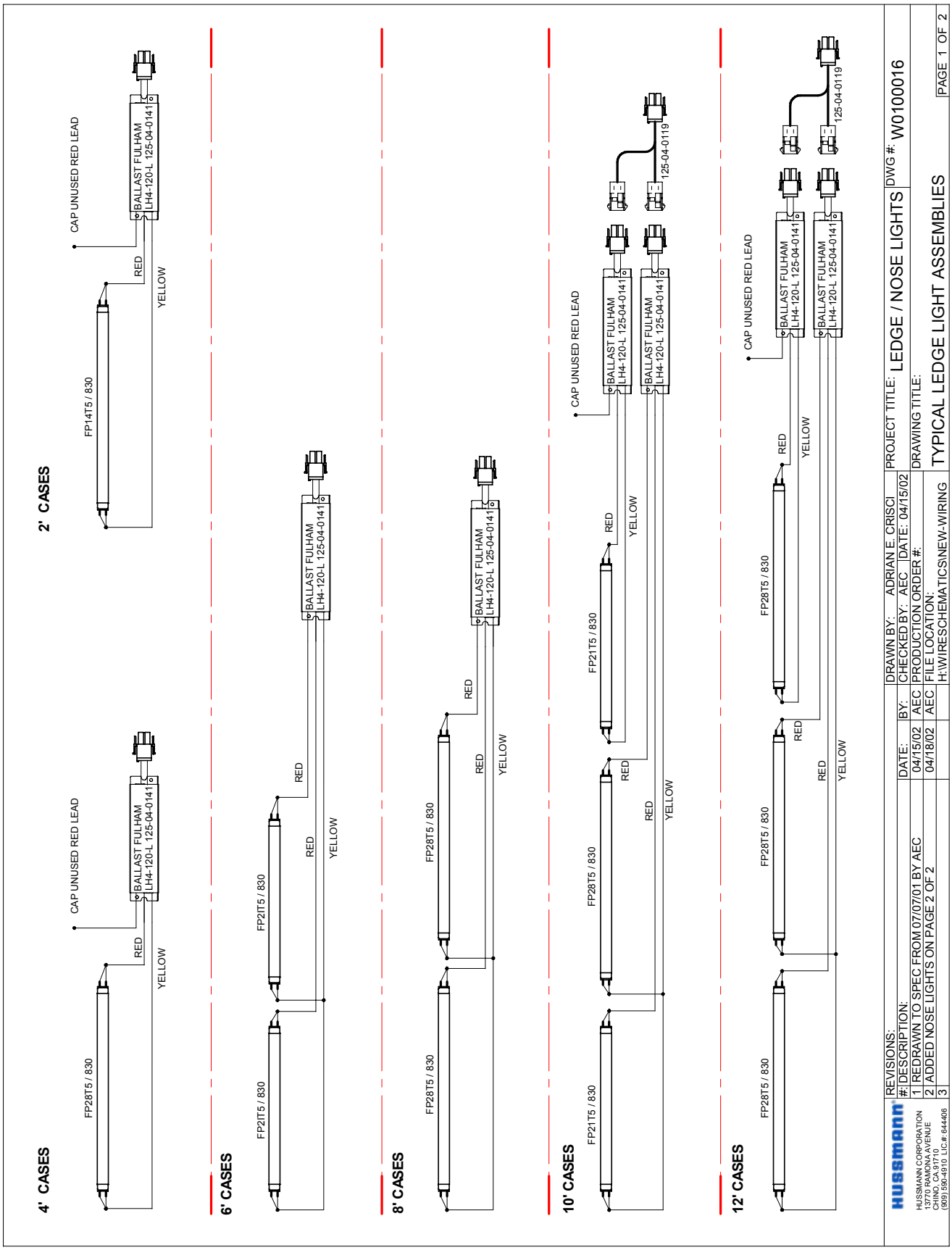

Electrical Schematics Continued

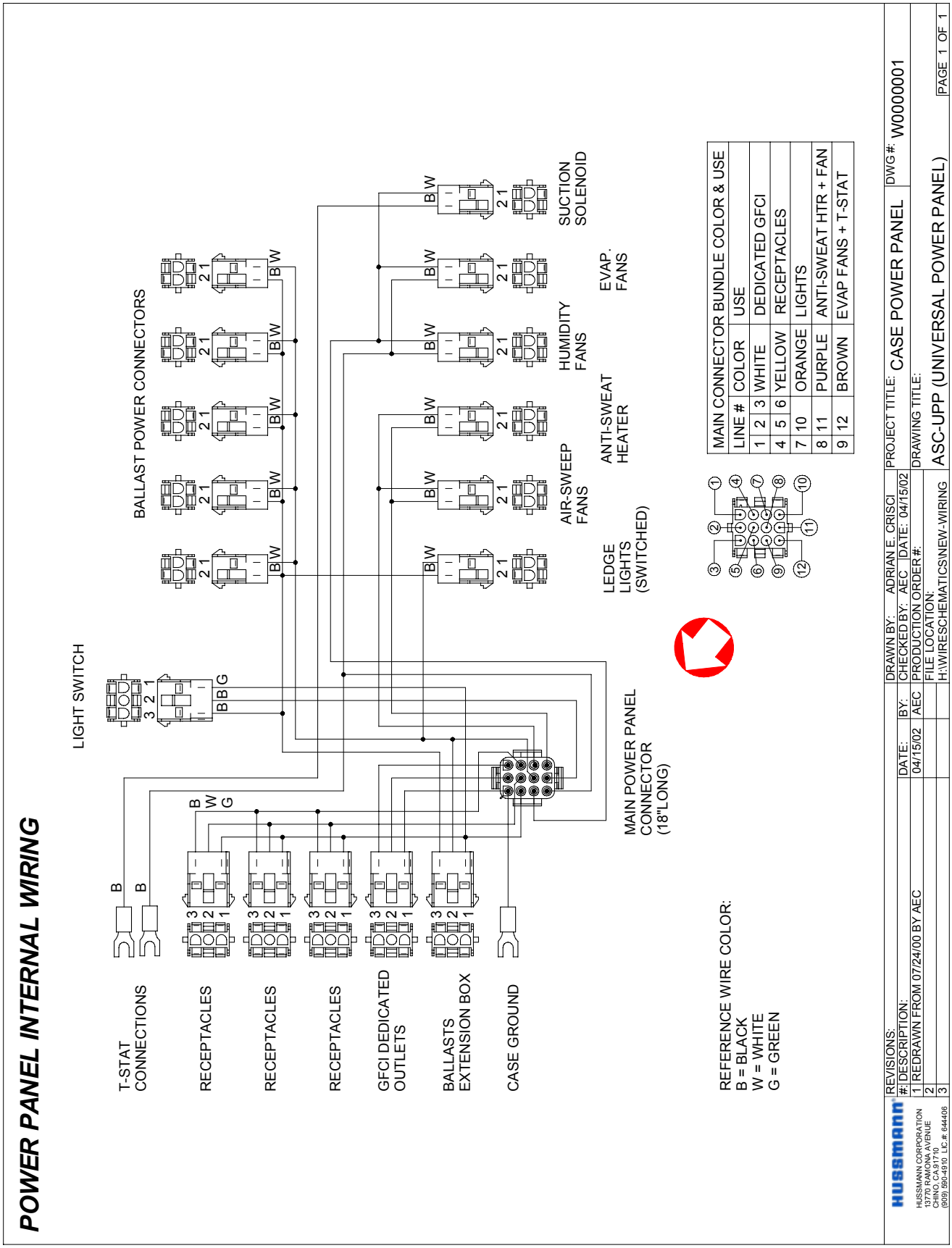

Electrical Schematics Continued

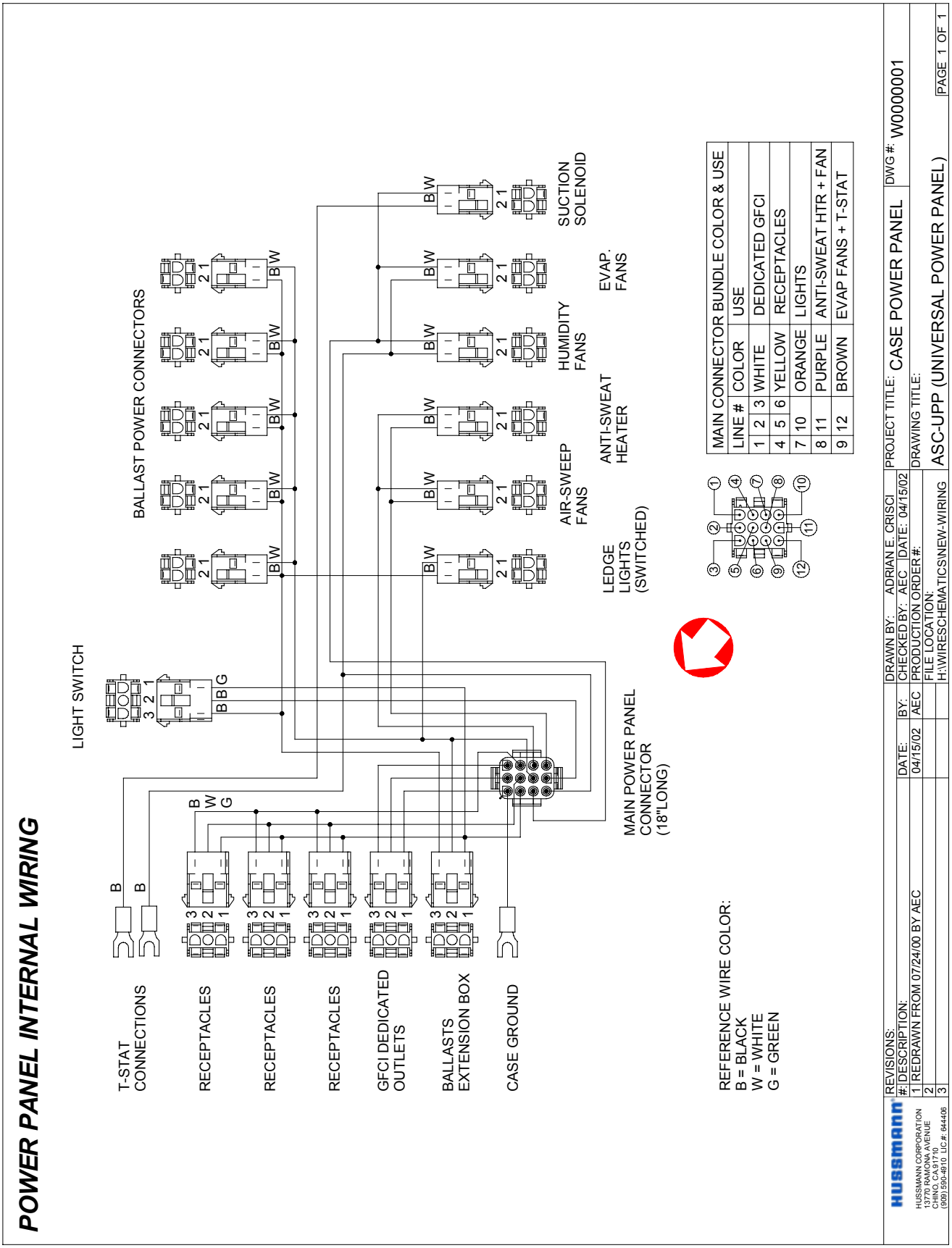

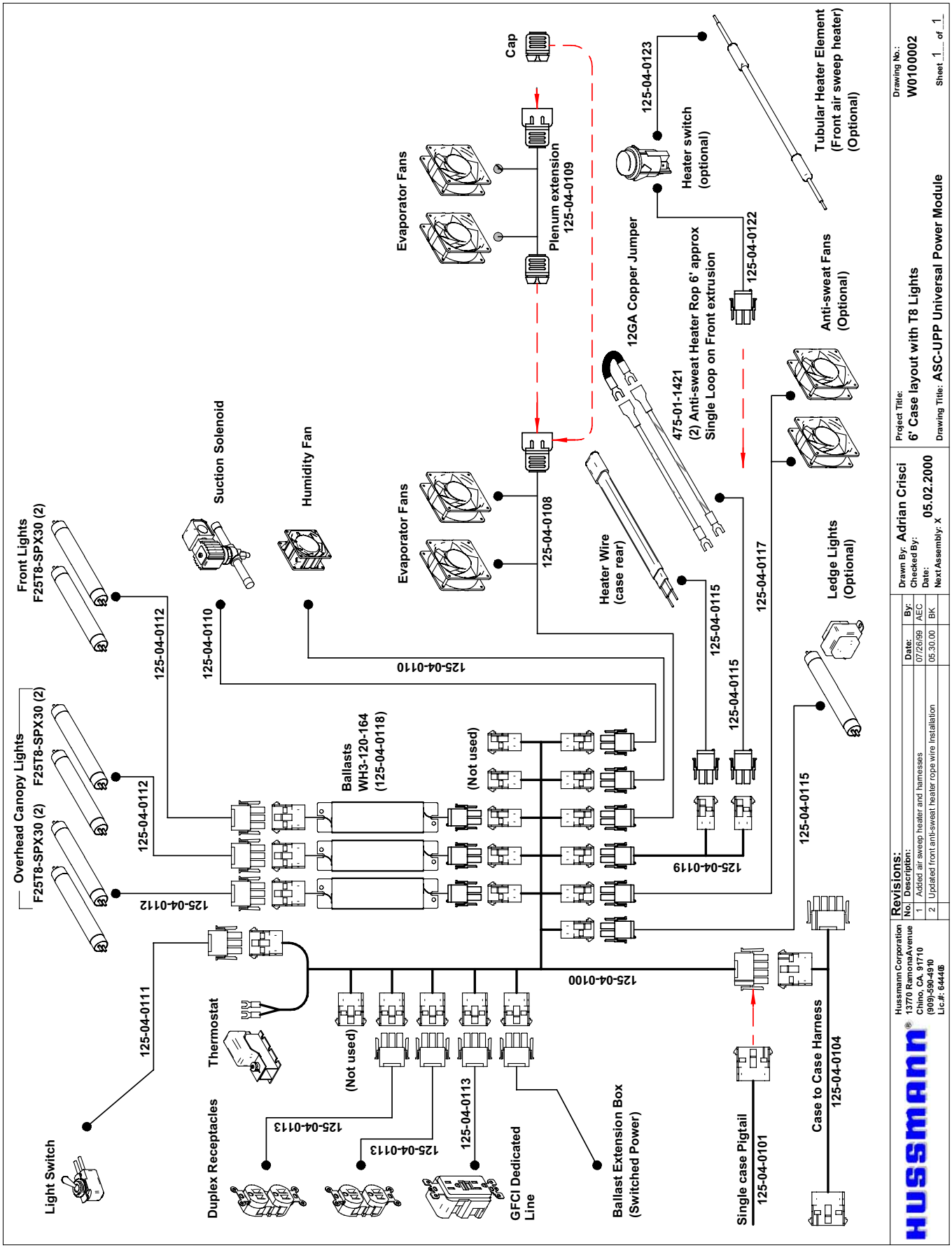
Cap
125-04-0123
Tubular Heater Element (Front air sweep heater) (Optional)
Evaporator Fans
Plenum extension 125-04-0109
Heater switch (optional)
12GA Copper Jumper
125-04-0122
Anti-sweat Fans (Optional)
475-01-1421 (2) Anti-sweat Heater Rop 6' approx Single Loop on Front extrusion
Suction Solenoid
Humidity Fan
Front Lights F25T8-SPX30 (2)
Evaporator Fans
125-04-0108
Heater Wire (case rear)
125-04-0117
Ledge Lights (Optional)
125-04-0112
125-04-0110
125-04-0115
125-04-0110
125-04-0115
Overhead Canopy Lights F25T8-SPX30 (2) F25T8-SPX30 (2)
Ballasts WH3-120-164 (125-04-0118)
(Not used)
125-04-0112
125-04-0119
125-04-0115
125-04-0112
125-04-0100
125-04-0111
Thermostat
(Not used)
Case to Case Harness 125-04-0104
Light Switch
Duplex Receptacles
125-04-0113
125-04-0113
125-04-0113
GFCI Dedicated Line
Ballast Extension Box (Switched Power)
Single case Pigtail 125-04-0101
HUSSMANN
Hussmann Corporation
13770 Ramona Avenue
Chino, CA 91710
(909)-590-4910
Lic.#: 644416
Revisions:
No. Description: Date: By:
1 Added air sweep heater and hamesses 07/26/99 AEC
2 Updated front anti-sweat heater rope wire Installation 05.30.00 BK
Drawn By: Adrian Crisci
Checked By:
Date: 05.02.2000
Next Assembly: X
Project Title: 6' Case layout with T8 Lights
Drawing Title: ASC-UPP Universal Power Module
Drawing No.: W0100002
Sheet 1 of 1

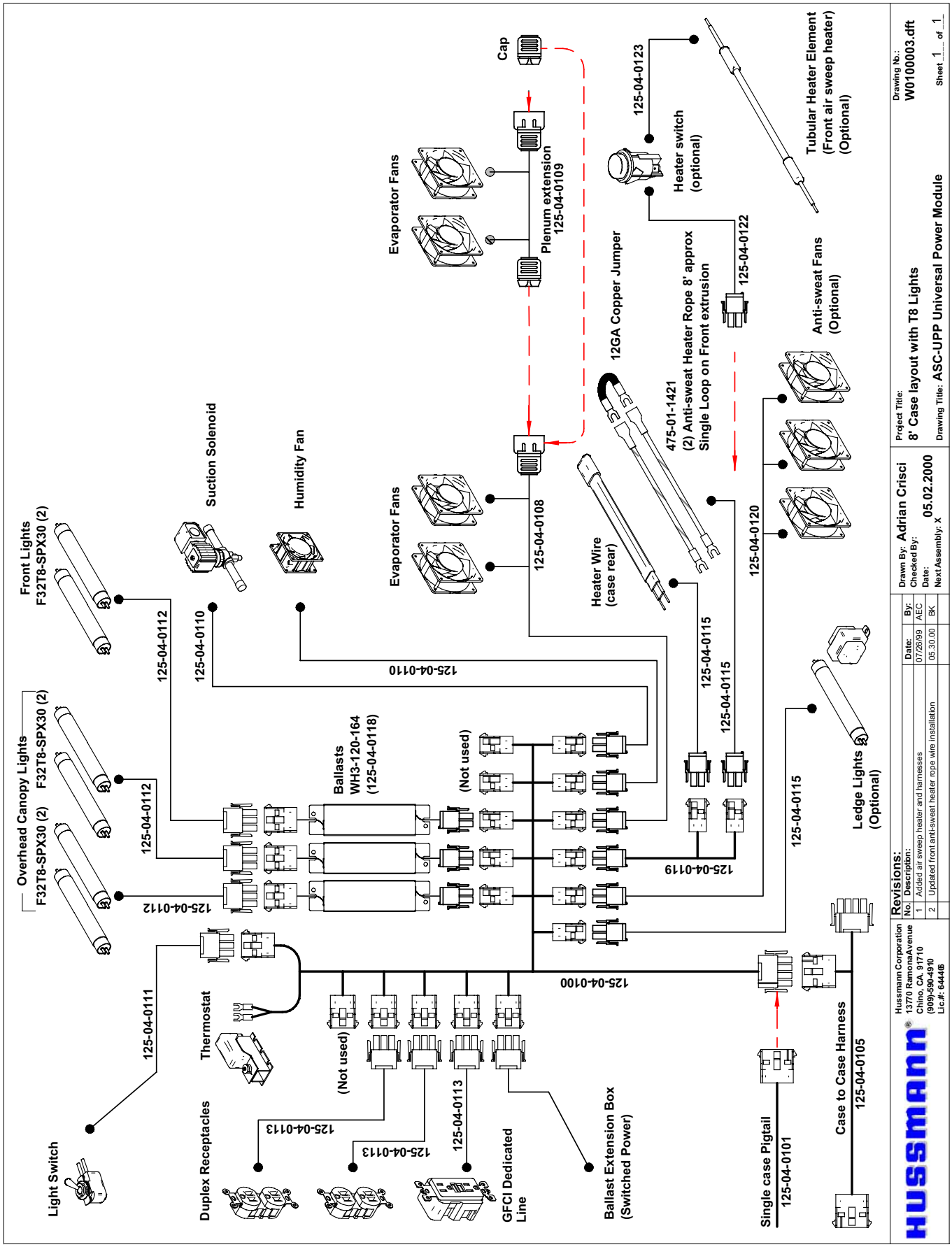
Front Lights
F32T8-SPX30 (2)
Overhead Canopy Lights
F32T8-SPX30 (2)
F32T8-SPX30 (2)
Suction Solenoid
Humidity Fan
Evaporator Fans
Evaporator Fans
Cap
Plenum extension
125-04-0109
125-04-0108
125-04-0123
Heater switch
(optional)
Tubular Heater Element
(Front air sweep heater)
(Optional)
12GA Copper Jumper
475-01-1421
(2) Anti-sweat Heater Rope 8' approx
Single Loop on Front extrusion
125-04-0122
Anti-sweat Fans
(Optional)
Heater Wire
(case rear)
125-04-0120
125-04-0112
125-04-0110
125-04-0110
125-04-0115
125-04-0115
125-04-0112
Ballasts
WH3-120-164
(125-04-0118)
(Not used)
125-04-0112
125-04-0119
125-04-0115
Ledge Lights
(Optional)
125-04-0100
125-04-0111
Thermostat
(Not used)
125-04-0113
125-04-0113
125-04-0113
Light Switch
Duplex Receptacles
GFCI Dedicated
Line
Ballast Extension Box
(Switched Power)
Single case Pigtail
125-04-0101
Case to Case Harness
125-04-0105
HUSSMANN
Hussmann Corporation
13770 Ramona Avenue
Chino, CA. 91710
(909)-590-4910
Lic.#: 644416
Revisions:
No. Description: Date: By:
1 Added air sweep heater and harnesses 07/26/99 AEC
2 Updated front anti-sweat heater rope wire installation 05.30.00 BK
Drawn By: Adrian Crisci
Checked By:
Date: 05.02.2000
Next Assembly: X
Project Title:
8' Case layout with T8 Lights
Drawing Title: ASC-UPP Universal Power Module
Drawing No.:
W0100003.dft
Sheet 1 of 1

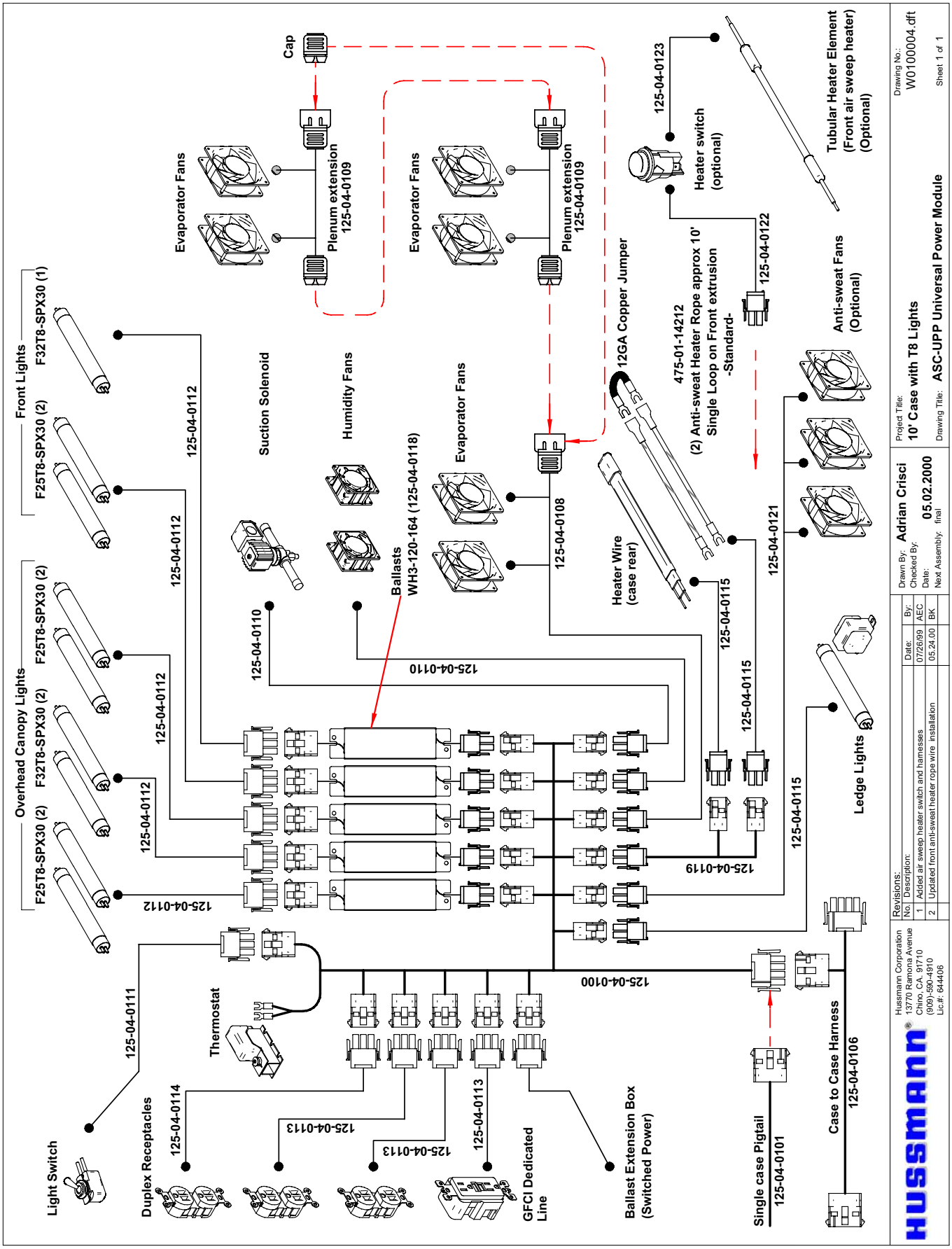
Front Lights
F25T8-SPX30 (2)
F32T8-SPX30 (1)
Overhead Canopy Lights
F25T8-SPX30 (2)
F32T8-SPX30 (2)
F25T8-SPX30 (2)
F32T8-SPX30 (2)
F25T8-SPX30 (2)
Light Switch
125-04-0111
Duplex Receptacles
125-04-0114
Thermostat
125-04-0112
125-04-0112
125-04-0112
125-04-0112
125-04-0112
Suction Solenoid
125-04-0110
125-04-0110
Humidity Fans
Ballasts
WH3-120-164 (125-04-0118)
Evaporator Fans
Evaporator Fans
Evaporator Fans
Cap
Plenum extension
125-04-0109
Plenum extension
125-04-0109
125-04-0108
125-04-0113
125-04-0113
125-04-0113
GFCI Dedicated Line
125-04-0100
Ballast Extension Box (Switched Power)
Heater Wire (case rear)
12GA Copper Jumper
475-01-14212
(2) Anti-sweat Heater Rope approx 10'
Single Loop on Front extrusion
-Standard-
125-04-0123
Heater switch (optional)
125-04-0122
Tubular Heater Element (Front air sweep heater) (Optional)
Anti-sweat Fans (Optional)
125-04-0121
125-04-0115
125-04-0115
125-04-0115
125-04-0119
Ledge Lights
Single case Pigtail
125-04-0101
Case to Case Harness
125-04-0106
HUSSMANN
Hussmann Corporation
13770 Ramona Avenue
Chino, CA. 91710
(909)-590-4910
Lic.#: 644406
Revisions:
No. Description: Date: By:
1 Added air sweep heater switch and harnesses 07/26/99 AEC
2 Updated front anti-sweat heater rope wire installation 05.24.00 BK
Drawn By: Adrian Crisci
Checked By:
Date: 05.02.2000
Next Assembly: final
Project Title: 10' Case with T8 Lights
Drawing Title: ASC-UPP Universal Power Module
Drawing No.: W0100004.dft
Sheet 1 of 1

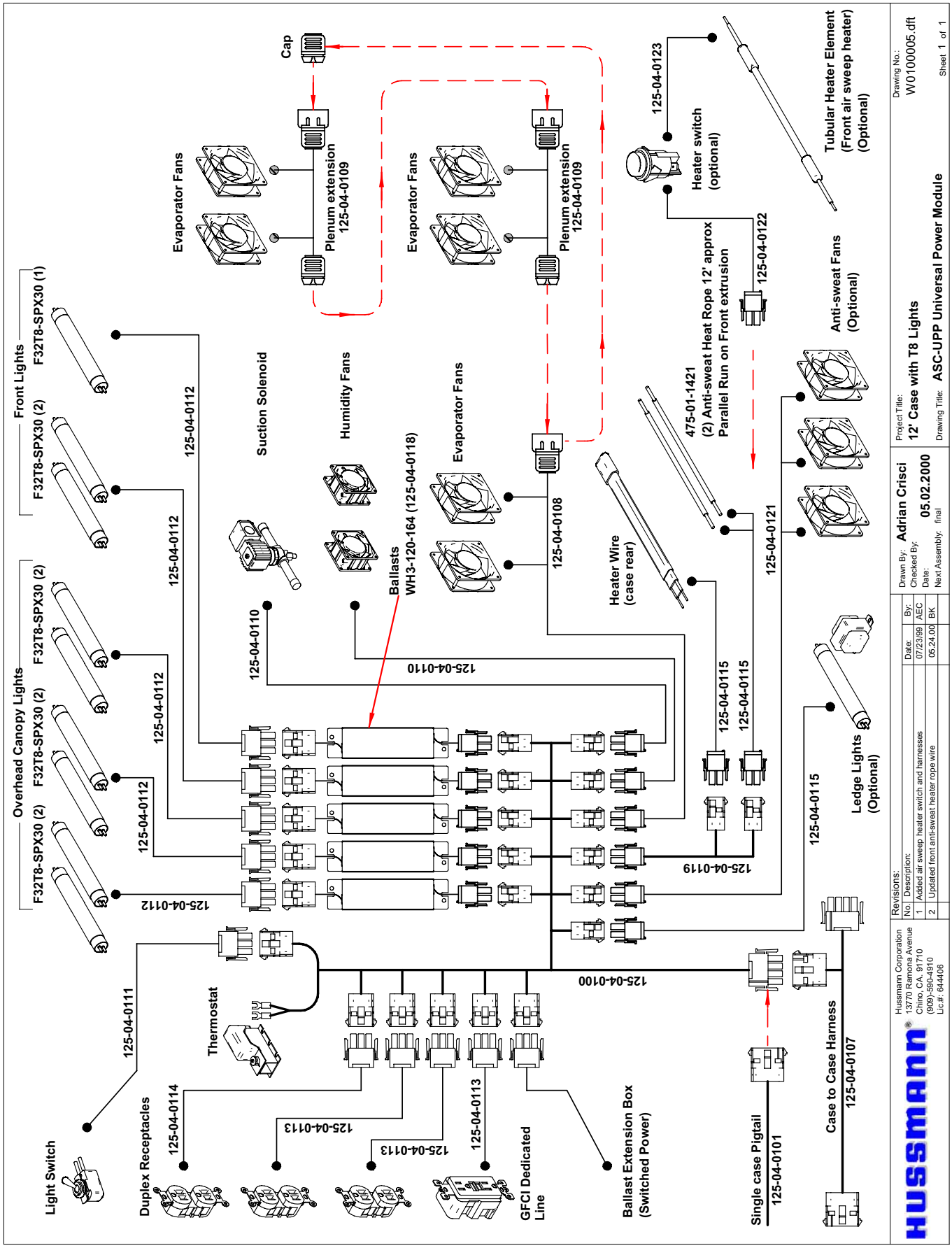
Cap
Evaporator Fans
Plenum extension
125-04-0109
Evaporator Fans
Plenum extension
125-04-0109
125-04-0123
Heater switch
(optional)
Tubular Heater Element
(Front air sweep heater)
(Optional)
Front Lights
F32T8-SPX30 (1)
F32T8-SPX30 (2)
125-04-0112
Suction Solenoid
Humidity Fans
Evaporator Fans
475-01-1421
(2) Anti-sweat Heat Rope 12' approx
Parallel Run on Front extrusion
125-04-0122
Anti-sweat Fans
(Optional)
Overhead Canopy Lights
F32T8-SPX30 (2)
F32T8-SPX30 (2)
F32T8-SPX30 (2)
F32T8-SPX30 (2)
125-04-0112
125-04-0112
125-04-0112
125-04-0110
Ballasts
WH3-120-164 (125-04-0118)
125-04-0108
Heater Wire
(case rear)
125-04-0121
125-04-0110
125-04-0115
125-04-0115
125-04-0119
125-04-0115
Ledge Lights
(Optional)
125-04-0112
125-04-0100
125-04-0111
Thermostat
Light Switch
Duplex Receptacles
125-04-0114
125-04-0113
125-04-0113
125-04-0113
GFCI Dedicated
Line
Ballast Extension Box
(Switched Power)
Single case Pigtail
125-04-0101
Case to Case Harness
125-04-0107
HUSSMANN
Hussmann Corporation
13770 Ramona Avenue
Chino, CA 91710
(909)-590-4910
Lic.#: 644406
Revisions:
No. Description: Date: By:
1 Added air sweep heater switch and harnesses 07/23/99 AEC
2 Updated front anti-sweat heater rope wire 05.24.00 BK
Drawn By: Adrian Crisci
Checked By:
Date: 05.02.2000
Next Assembly: final
Project Title: 12' Case with T8 Lights
Drawing Title: ASC-UPP Universal Power Module
Drawing No.: W0100005.dft
Sheet 1 of 1

APPENDIX A. – Temperature Guidelines Refrigerated

The refrigerators should be operated according to Hussmann's published engineering specifications for entering air temperatures for specific equipment applications. Table 1 shows the typical temperature of the air entering the food zone one hour before the start of defrost and one hour after defrost for various categories of refrigerators. Refer to Appendix C for Field Evaluation Guidelines.

TABLE 1

TYPE OF REFRIGERATOR	TYPICAL ENTERING AIR TEMPERATURE
I. OPEN DISPLAY	
A. Non frozen:	
1) Meat	28°F
2) Dairy/Deli	32°F
3) Produce	
a. Processed	36°F
b. Unprocessed	45°F
B. Frozen	0°F
C. Ice Cream	-5°F
II. CLOSED DISPLAY	
A. Non frozen:	
1) Meat	34°F
2) Dairy/Deli	34°F
3) Produce	
a. Processed	36°F
b. Unprocessed	45°F
B. Frozen	0°F
C. Ice Cream	-5°F

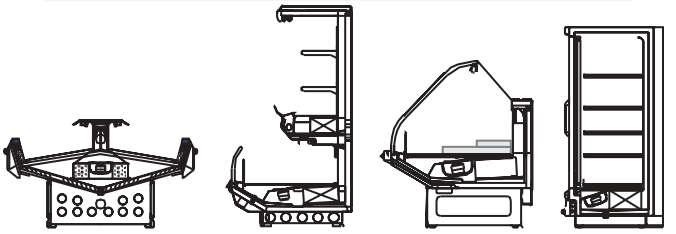

Single Deck *Multi Deck* *Service Case* *Reach-In*

I. Open Display Styles ***II. Closed Display Styles***

APPENDIX B. – Application Recommendations Refrigerated

1.0 Temperature performance is critical for controlling bacteria growth. Therefore, the following recommendations are included in the standard. They are based on confirmed field experience over many years.

1.1 The installer is responsible for following the installation instructions and recommendations provided by Hussmann for the installation of each individual type refrigerator.

1.2 Refrigeration piping should be sized according to Hussmann's equipment recommendations and installed in accordance with normal refrigeration practices. Refrigeration piping should be insulated according to Hussmann's recommendations.

1.3 A clogged waste outlet blocks refrigeration. The installer is responsible for the proper installation of the system which dispenses condensate waste through an air gap into the building indirect waste system.

1.4 The installer should perform a complete start-up evaluation prior to the loading of food into the refrigerator, which includes such items as:

a) Initial temperature performance, coils should be properly fed with a refrigerant according to Hussmann's recommendations.

b) Observation of outside influences such as drafts, radiant heating from the ceiling and from lamps. Such influence should be properly corrected or compensated for.

c) At the same time, checks should be made of the store dry-bulb and wet-bulb temperatures to ASCSertain that they are within the limits prescribed by Hussmann.

d) Complete start-up procedures should include checking through a defrost to make certain of its adequate frequency and length without substantially exceeding the actual needs. This should include checking the electrical or refrigerant circuits to make sure that defrosts are correctly programmed for all the refrigerators connected to each refrigeration system.

e) Recording instruments should be used to check performance.

APPENDIX C. – Field Recommendations - Refrigerated

Recommendations for field evaluating the performance of retail food refrigerators and hot cases

1.0 The most consistent indicator of display refrigerator performance is temperature of the air entering the product zone (Refrigerated see Diagram 1, Appendix A). In practical use, the precise determination of return air temperature is extremely difficult. Readings of return air temperatures will be variable and results will be inconsistent. The product temperature alone is not an indicator of refrigerator performance.

NOTE: Public Health will use the temperature of the product in determining if the refrigerator will be allowed to display potentially hazardous food. For the purpose of this evaluation, product temperature above the FDA Food Code 1993 temperature for potentially hazardous food will be the first indication that an evaluation should be performed. It is expected that all refrigerators will keep food at the FDA Food Code 1993 temperature for potentially hazardous food.

1.1 The following recommendations are made for the purpose of arriving at easily taken and understood data which, coupled with other observations, may be used to determined whether a display refrigerator is working as intended:

a) INSTRUMENT – A stainless steel stem-type thermometer is recommended and it should have a dial a minimum of 1 inch internal diameter. A test thermometer scaled only in Celsius or

dually scaled in Celsius and Fahrenheit shall be accurate to 1°C (1.8°F). Temperature measuring devices that are scaled only in Fahrenheit shall be accurate to 2°F. The thermometer should be checked for proper calibration. (It should read 32°F when the stem is immersed in an ice water bath).

b) LOCATION – The probe or sensing element of the thermometer should be located in the airstream where the air first enters the display or storage area, and not more than 1 inch away from the surface and in the center of the discharge opening.

c) READING – It should first be determined that the refrigerator is refrigerating and has operated at least one hour since the end of the last defrost period. The thermometer reading should be made only after it has been allowed to stabilize, i.e., maintain a constant reading.

d) OTHER OBSERVATIONS – Other observations should be made which may indicate operating problems, such as unsatisfactory product, feel/appearance.

e) CONCLUSIONS – In the absence of any apparent undesirable conditions, the refrigerator should be judged to be operating properly. If it is determined that such condition is undesirable, i.e., the product is above proper temperature, checks should be made for the following:

1. Has the refrigerator been loaded with warm product?
2. Is the product loaded beyond the "Safe Load Line" markers?
3. Are the return air ducts blocked?
4. Are the entering air ducts blocked?
5. Is a dumped display causing turbulent air flow and mixing with room air?
6. Are spotlights or other high intensity lighting directed onto the product?
7. Are there unusual draft conditions (from heating / air-conditioning ducts, open doors, etc.)?
8. Is there exposure to direct sunlight?
9. Are display signs blocking or diverting airflow?
10. Are the coils of the refrigerator iced up?
11. Is the store ambient over 75°F, 55% RH as set forth in ASHRAE Standard 72 and ASHRAE Standard 117?
12. Are the shelf positions, number, and size other than recommended by Hussmann?
13. Is there an improper application or control system?
14. Is the evaporator fan motor/blade inoperative?
15. Is the defrost time excessive?
16. Is the defrost termination, thermostat (if used) set too high?
17. Are the refrigerant controls incorrectly adjusted?
18. Is the air entering the condenser above design conditions? Are the condenser fins clear of dirt, dust, etc.?
19. Is there a shortage of refrigerant?
20. Has the equipment been modified to use replacements for CFC-12, CFC-502 or other refrigerant? If so, have the modifications been made in accordance with the recommendations of Hussmann equipment? Is the refrigerator charged with the proper refrigerant and lubricant? Does the system use the recommended compressor?

APPENDIX D. – Recommendations to user - Refrigerated

1.0 Hussmann should provide instructions and recommendations for proper periodic cleaning. The user will be responsible for such cleaning, including the cleaning of low temperature equipment within the compartment and the cooling coil area(s). Cleaning practices, particularly with respect to proper refrigerator unloading and warm-up, must be in accordance with applicable recommendations.

1.1 Cleaning of non frozen food equipment should include a weekly cleaning of the food compartment as a minimum to prevent bacteria growth from accumulating. Actual use and products may dictate more frequent cleaning. Circumstances of use and equipment design must also dictate the frequency of cleaning the display areas. Weekly washing down of the storage compartment is also recommended, especially for equipment subject to drippage of milk or other liquids, or the collection of vegetable, meat, crumbs, etc. or other debris or litter. Daily cleaning of the external areas surrounding the storage or display compartments with detergent and water will keep the equipment presentable and prevent grime buildup.

1.2 Load levels as defined by Hussmann must be observed.

1.3 The best preservation is achieved by following these rules:

a) Buy quality products.

b) Receive perishables from transit equipment at the ideal temperature for the particular product.

c) Expedite perishables to the store's storage equipment to avoid unnecessary warm-up and prolonged temperature recovery. Food store refrigerators are not food chillers nor can they reclaim quality lost through previous mishandling.

d) Care must be taken when cross merchandising products to ensure that potentially hazardous vegetable products are not placed in non refrigerated areas.

e) Display and storage equipment doors should be kept closed during periods of inactivity.

f) Minimize the transfer time of perishables from storage to display.

g) Keep meat under refrigeration in meat cutting and processing area except for the few moments it is being handled in processing. When a cut or tray of meat is not to be worked on immediately, the procedure should call for returning it to refrigeration.

h) Keep tools clean and sanitized. Since mechanical equipment is used for fresh meat processing, all such equipment should be cleaned at

least daily and each time a different kind of meat product comes in contact with the tool or equipment.

i) Make sure that all refrigeration equipment is installed and adjusted in strict accordance with Hussmann's recommendations.

j) See that all storage and refrigeration equipment is kept in proper working order by routine maintenance.

HUSSMANN®

Limited Warranty

This warranty is made to the original user at the original installation site and is not transferable.

Hussmann merchandisers are warranted to be free from defect in material and workmanship under normal use and service for a period of one (1) year from the date of original installation (not to exceed fifteen (15) months from the date of shipment for the factory). **Hussmann Impact Modular Coils are warranted for a total of five (5) years based upon the above criteria**. Hussmann's obligation under this warranty shall be limited to repairing or exchanging any part or parts, without charge F.O.B. factory or nearest authorized parts depot within said period and which is proven to the satisfaction of the original manufacturing plant warranty group to be thus defective.

Hussmann covers the entire case or refrigeration product and all its components (except for lamps, driers, fuses, and other maintenance type replacement parts) for the one (1) year warranty period.

Additionally, Hussmann warrants for a total period of three (3) years all sealed, multi-glass assemblies except those used in sliding doors on closed meat display cases. If within three (3) years from the date of installation (not to exceed thirty-nine (39) months from the date of shipment from factory), it shall be proven to the satisfaction of the originating factory warranty group that there is impaired visibility through the multi-glass assemblies thereof caused by moisture between the glasses, the multi-glass assembly will be replaced free of charge, F.O.B. factory. This additional warranty excludes accident, misuse, or glass breakage.

On Hussmann manufactured self-contained display cases, Hussmann agrees to repair or exchange, at its option, the original motor/compressor unit only with a motor/compressor of like or of similar design and capacity if it is shown to the satisfaction of Hussmann that the motor/compressor is inoperative due to defects in factory workmanship or material under normal use and service as outlined in Hussmann's "Installation Instructions" which are shipped inside new Hussmann equipment. Hussmann's sole obligation under this warranty shall be limited to a period not to exceed five years from date of factory shipment.

On Hussmann refrigeration systems, an additional (4) year extended warranty for the motor/compressor assembly is available, but must be purchased prior to shipment to be in effect. Hussmann reserves the right to inspect the job site, installation and reason for failure.

The motor/compressor warranties listed above do not include replacement or repair of controls, relays, capacitors, overload protectors, valve plates, oil pumps, gaskets or any external part on the motor/compressor replaceable in the field, or any other part of the refrigeration system or self-contained display case.

THE WARRANTIES TO REPAIR OR REPLACE ABOVE RECITED ARE THE ONLY WARRANTIES, EXPRESS, IMPLIED OR STATUTORY, MADE BY HUSSMANN WITH RESPECT TO THE ABOVE MENTIONED EQUIPMENT, INCLUDING ANY IMPLIED WARRANTY OF MERCHANTABILITY OR FITNESS, AND HUSSMANN NEITHER ASSUMES NOR AUTHORIZES ANY PERSON TO ASSUME FOR IT, ANY OTHER OBLIGATION OR LIABILITY IN CONNECTION WITH THE SALE OF SAID EQUIPMENT OR ANY PART THEREOF.

THIS WARRANTY SHALL NOT APPLY TO LOSS OF FOOD OR CONTENTS OF THE EQUIPMENT DUE TO FAILURE FOR ANY REASON. HUSSMANN SHALL NOT BE LIABLE:

- For payment of labor for any removal or installation of warranted parts;
- For any repair or replacements made without the written consent of Hussmann, or when the equipment is installed or operated in a manner contrary to the printed instructions covering installation and service which accompanied such equipment;
- For any damages, delays, or losses, direct or consequential which may arise in connection with such equipment or part thereof;
- For damages caused by fire, flood, strikes, acts of God or circumstances beyond its control;
- When the equipment is subject to negligence, abuse, misuse or when the serial number of the equipment has been removed, defaced, or altered;
- When the equipment is operated on low or improper voltages
- When the equipment is put to a use other than normally recommended by Hussmann (i.e. deli case used for fresh meat);
- When operation of this equipment is impaired due to improper drain installation;
- For payment of refrigerant loss for any reason;
- For costs related to shipping or handling of replacement parts.

Hussmann Corporation, Corporate Headquarters: Bridgeton, Missouri, U.S.A. 63044 August 1, 1998

Service Record

Last service date: **By:**

HUSSMANN®/Chino

Additional copies of this publication may be obtained by contacting:

Hussmann® Chino
13770 Ramona Avenue • Chino, California 91710
(909) 628-8942 FAX
(909) 590-4910
(800) 395-9229

The *MODEL NAME* and *SERIAL NUMBER* is required in order to provide you with the correct parts and information for your particular unit.

They can be found on a small metal plate on the unit.
Please note them below for future reference.

MODEL:

SERIAL NUMBER: