HUSSMANN®

112023

DOE 2017
Energy
Efficiency
Compliant

Hussmann refrigerated merchandisers configured for sale for use in the United States meet or surpass the requirements of the DOE 2017 energy efficiency standards.

DZC-V/C-R
DZC-V/C-D
DZC-V-DWR-R

BAKERY SERVICE MERCHANDISER

USER MANUAL

DZC-V/C-048-R	**DZC-V/C-048-D**	**DZC-V-048-DWR-R**
DZC-V/C-057-R	**DZC-V/C-057-D**	**DZC-V-057-DWR-R**
DZC-V/C-075-R	**DZC-V/C-075-D**	**DZC-V-075-DWR-R**
DZC-V/C-096-R	**DZC-V/C-096-D**	**DZC-V-096-DWR-R**
DZC-V/C-144-R	**DZC-V/C-144-D**	**DZC-V-144-DWR-R**

Table of Contents

CONTENT	SUB CONTENT	PAGE
Notice on Loading and Handling		3
General Information		4
Section and Plan Views		5-6
Installation	Preparation	7
	Lifting and Transporation - Using J-Bars and Dollies	8
	ForkLift Guidance	9
	Recommended Sequence for Setting Lineups	10
	Guidance for Lineups and Uneven Floors	11
	Method for Leveling	12
	Joining and Bolting	13
	Bolting Points and Sequence	14
	Bolting / Sealing Detail	15
	Joining and Bolting - Common and Division Ends	16
	Canopy Arm Angle Adjustment	17
	Glass Adjustment - Front-to-Back	18
	Glass Adjustment - Left-to-Right	19
	Glass Adjustment - Correcting Uneven Gaps or Swing	20
	Joint Trim - Shipped Loose to Job Items	21
	Body Panels	22
	Loose to Job Pack List / Check Sheet	23
Refrigeration	Serial Plate Location /Piping / Line Sizing / Oil Traps	24
	Specifications / Data Sheet	25-28
Electrical	General Information	29
	Component Locations	30
	Access to Junction Box / Controller Box / Drains	31
	Access to LED Driver(s)	32
	Wiring Diagram 048	33
	Wiring Diagram 057	34
	Wiring Diagram 075	35
	Wiring Diagram 096	36
	Wiring Diagram 144	37
	Wiring Diagram 048, 057, 075, 096, 144 Dry	38
User Information	Startup / Shelf Weight Limits / Drawer Weight Limits	39
Maintenance	Cleaning Exterior and Interior	40
	Maintenance Tips	41
	Heater Service and Air Sweep Cleaning	42
	Lift Hardware Gas Spring Servicing	43
	Lift Hardware Gas Spring Replacement -Part 1	44
	Lift Hardware Gas Spring Replacement -Part 2	45
	Trouble Shooting Part 1	46
	Trouble Shooting Part 2	47
	Parts Diagram	48-49
	Parts List	50-52

Notice

WARNING

-DO NOT Load or stand over the top of the case.
Glass breakage may occur if precautions are disregarded

*Broken glass can cause lacerations, cuts, and puncture wounds which may result severed arteries or tendons, amputations, eye injuries, or exposure to disease.

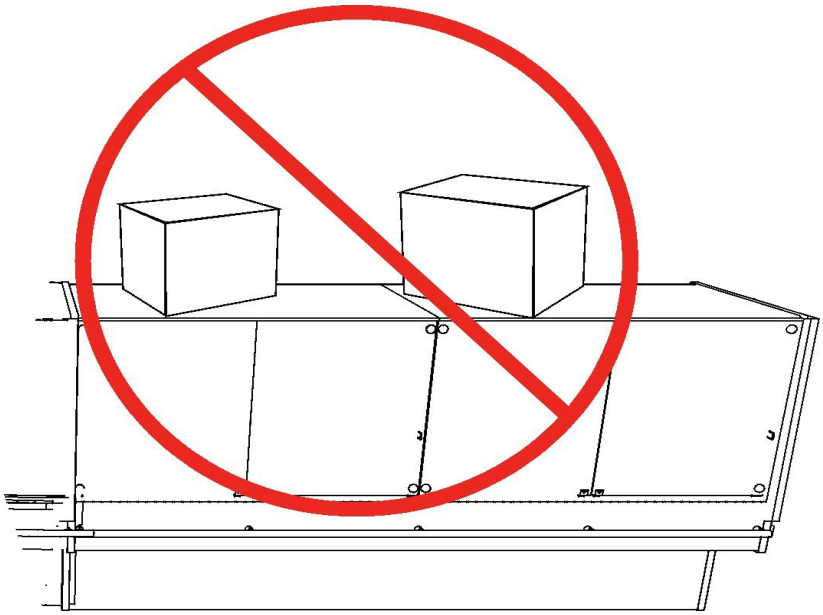

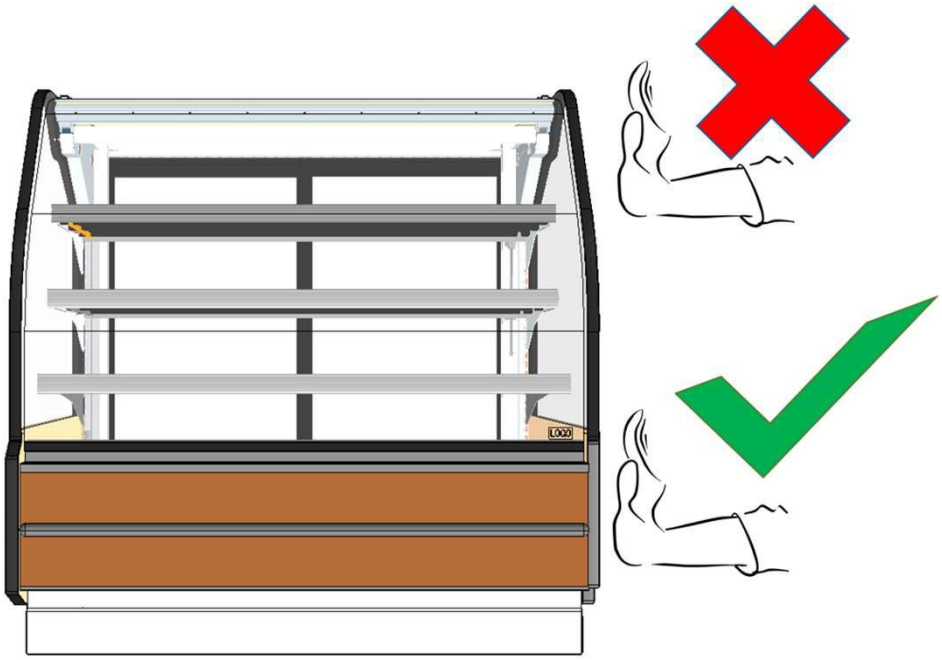

IMPORTANT

-DO NOT ATTEMPT TO MOVE THE MERCHANDISER BY APPLYING FORCE TO THE CANOPY AREA (EVEN IF WOODEN BRACES OR END PANELS ARE PRESENT)

-APPLY PUSHING FORCES NEAR THE LINER / TUB AREA IN ORDER TO BRING MERCHANDISERS CLOSER TOGETHER DURING JOINING

General Information

Case Description:

Description: Refrigerated Service Bakery Merchandiser

Shipping Damage: All equipment should be thoroughly examined for shipping damage before and during unloading. This equipment has been carefully inspected at our factory and the carrier has assumed responsibility for safe arrival. If damaged, either apparent or concealed, claim must be made to the carrier Immediately.

Apparent Loss or Damage: If there is an obvious loss or damage, it must be noted on the freight bill or express receipt and signed by the carrier's agent; otherwise, carrier may refuse claim. The carrier will supply necessary claim forms.

Concealed Loss or Damage: When loss or damage is not apparent until after all equipment is uncrated, a claim for concealed damage is made. Make request in writing to carrier for inspection within 15 days and retain all packaging. The carrier will supply inspection report and required claim forms.

Shortages: Check your shipment for any possible shortages of material. If a shortage should exist and is found to be the responsibility of Hussmann Chino, notify Hussmann Chino. If such a shortage involves the carrier, notify the carrier immediately, and request an inspection. Hussmann Chino will acknowledge shortages within ten days from receipt of equipment.

Hussmann Chino Product Control: The serial number and shipping date of all equipment have been recorded in Hussmann's files for warranty and replacement part purposes. All correspondence pertaining to warranty or parts ordering must include the serial number of each piece of equipment involved, in order to provide the customer with the correct parts.

Location/Store Conditions: The DZC-V/C-R / DZC-V-DWR-R refrigerated merchandiser has been designed for use only in air-conditioned stores where temperature and humidity are maintained at or below 75˚F Dry bulb and 55% relative humidity. DO NOT allow air conditioning, electric fans, ovens, open doors or windows (etc.) to create air currents around the merchandiser, as this will impair its correct operation.

Keep this booklet with the case at all times for future reference.

HUSSMANN®/CHINO

This equipment is to be installed to comply with the applicable NEC, Federal, State, and Local Plumbing and Construction Code having jurisdiction.

Case Sections

DZC-V-R
SERVICE BAKERY

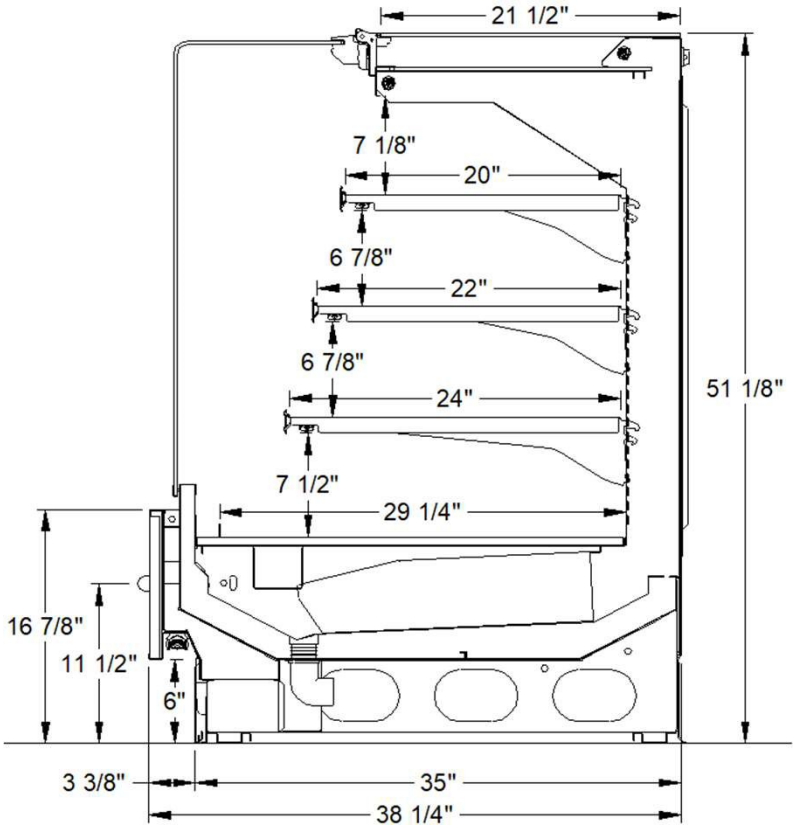

DZC-C-R
SERVICE BAKERY

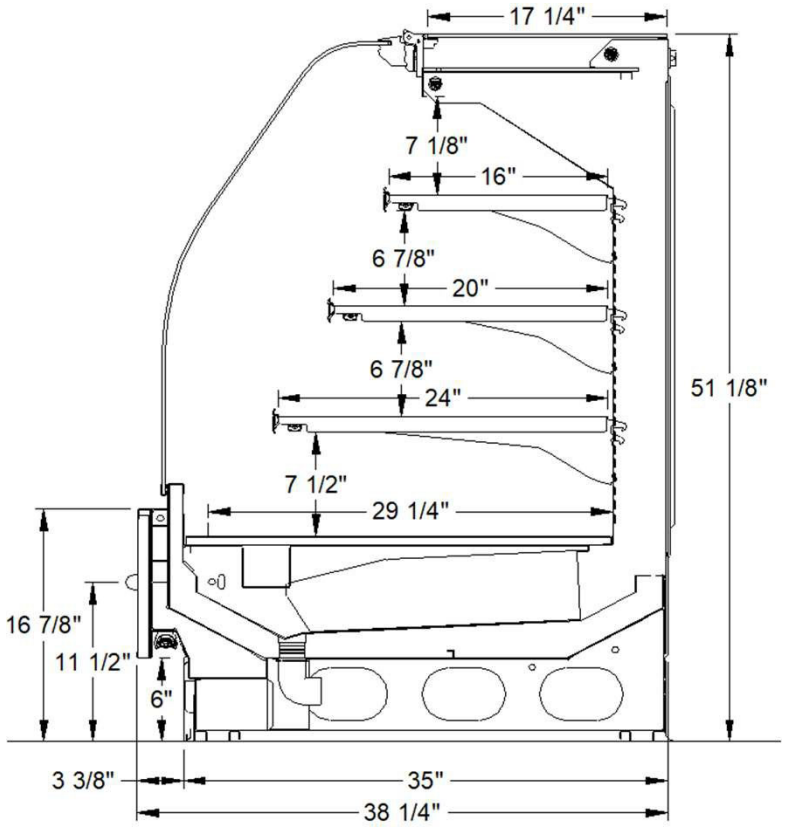

Case Plan Views

DZC-V/C-R

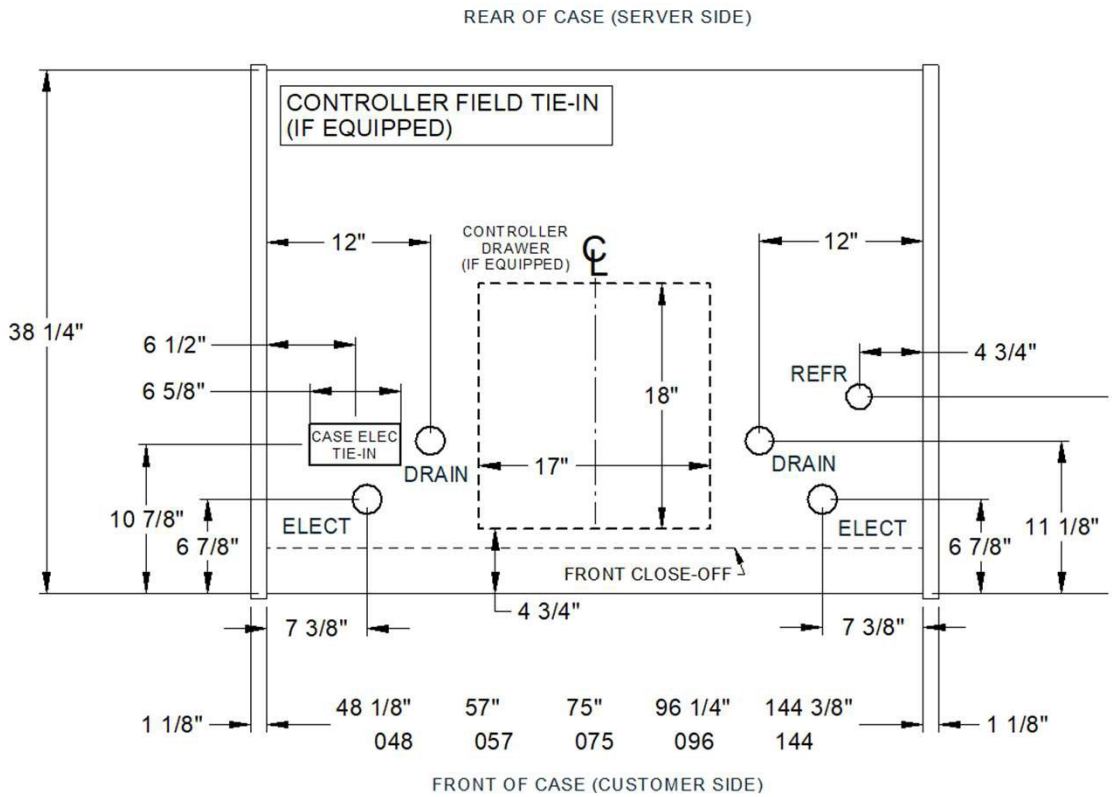

Case Sections

DZC-V-DWR-R
SERVICE BAKERY

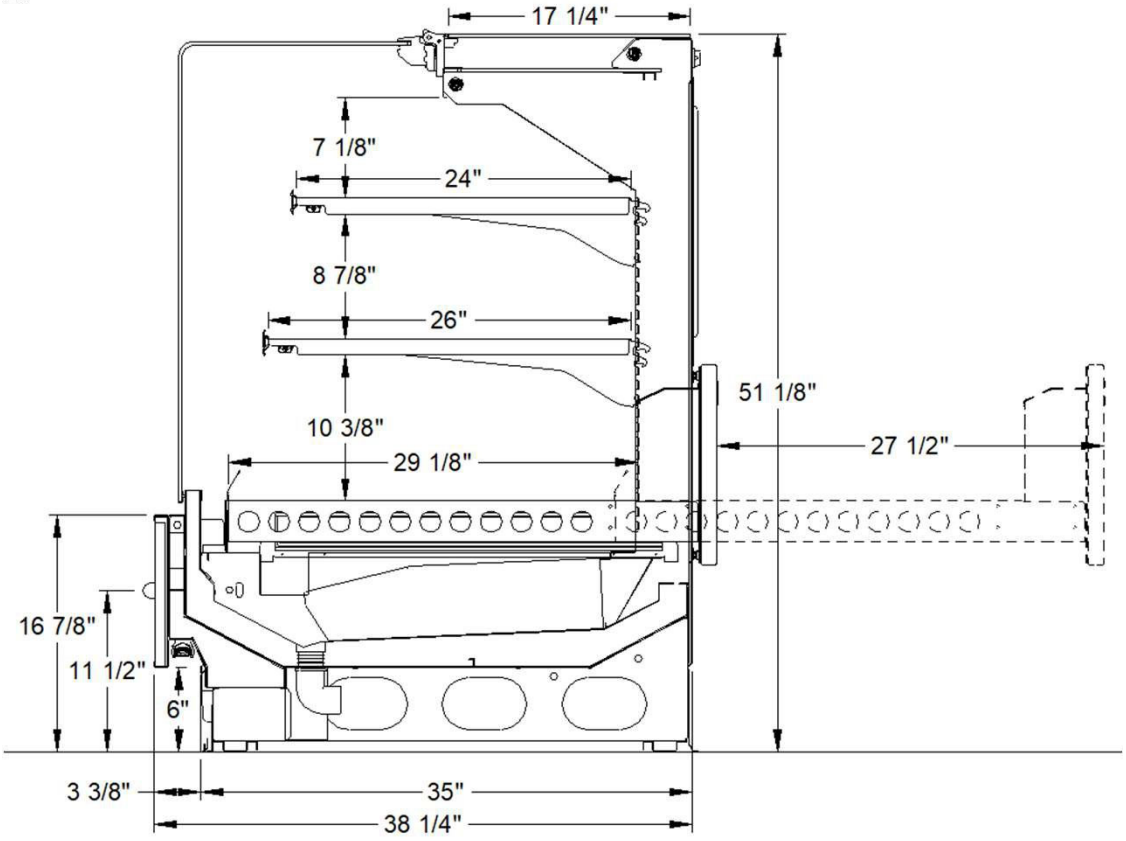

Case Plan Views

DZC-V-DWR

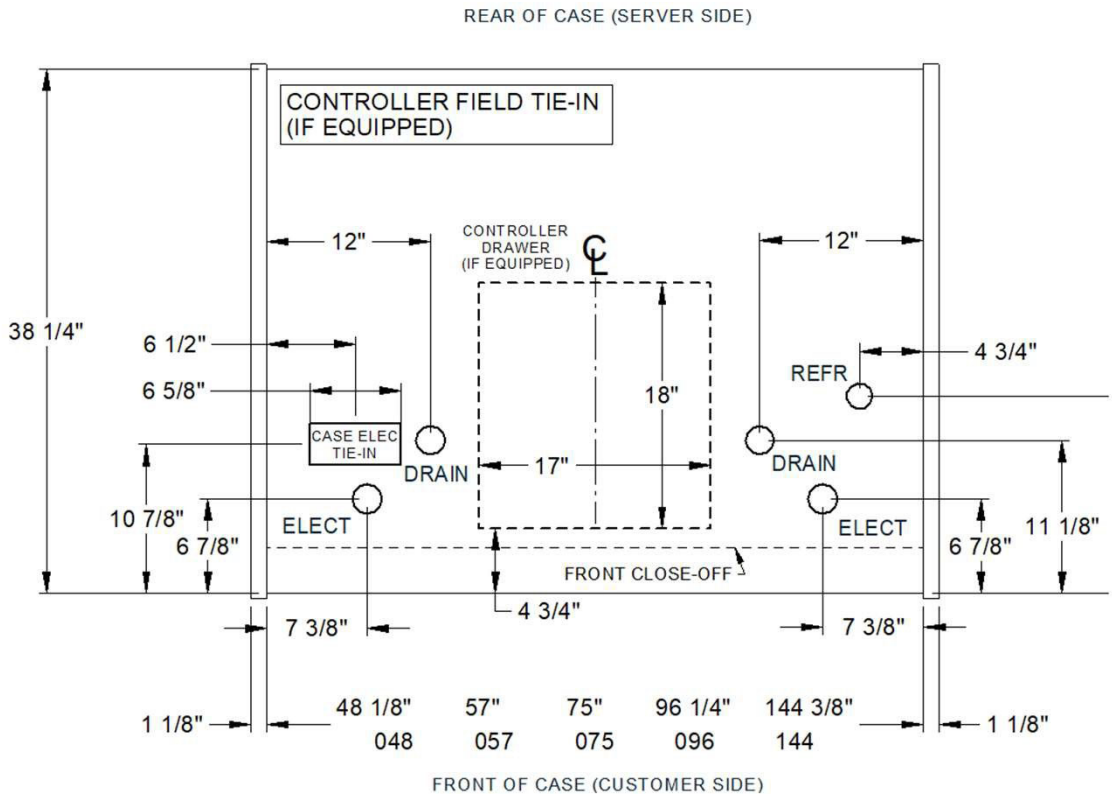

Installation – Preparation

Receiving Case and Preparing for Installation

IMPORTANT

-DO NOT REMOVE FOAM BLOCK FROM SHELVES UNTIL THE MERCHANDISER IS POSITIONED FOR INSTALLATION

-LEAVE WOOD BRACING IN PLACE UNTIL CASES ARE READY FOR JOINING AND HAVE BEEN TAKEN OFF TRANSPORTATION DOLLIES

-PLASTIC WRAP MAY BE REMOVED TO ACCESS PARTS, WARNINGS, AND INSTRUCTIONS

Prepare By:

1. Inspect equipment for damage. Any claim for loss or damage must be made to the carrier. The carrier will provide any necessary inspection/claim form. If there is obvious loss or damage, it must be noted on the freight bill or express receipt and signed by the carrier's agent; otherwise, carrier may refuse claim.
2. Read instructions and warnings on handling and transportation. Ensure the proper transportation equipment is being used.
3. Survey and mark out the installation area and plan footprint. Snapping chalk lines is recommended.

Snapping Chalk Lines

Mark floors with Chalk snap lines where cases are to be located. Chalk lines are to run along the base or legs of cases.

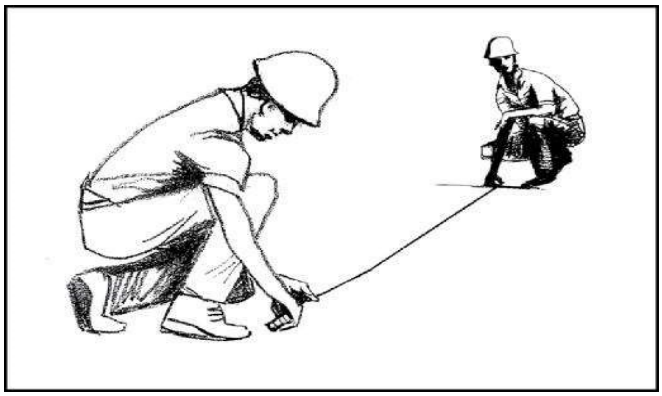

Installation – Lifting and Transportation – Using J-Bars and Dollies

DZC Transportation Using Dollies

Using J-Bars to get the merchandizer onto Dollies for transportation is the preferred and recommend technique for getting the case to its final location.

1. The DZC can be lifted with a J-Bar high enough to place furniture dollies under each base leg.
2. Engage the DZC from the points illustrated in the Graphic Below.
3. Remove lower body panels before lifting with a J-Bar to prevent damage.
4. Ensure the case is balanced before attempting to place on dollies. Reposition J-Bar if necessary.
5. Lift the case only as high as necessary to place a dolly.
6. Repeat the procedure at the other end and in the center, as necessary.
7. 048 and 057 cases require 2 dollies. 075 and 096 cases require 3 dollies. 144 cases require 4 dollies.
8. Evenly support the entire base structure on rollers or dollies before attempting to move.

Each Base Leg must have its own dolly to properly support the case.

WARNING

Improper placement of dollies can damage the base runners and other components. Always use a spotter to place the dollies and ensure even support. Ensure hands are clear before setting the load down on the dollies.

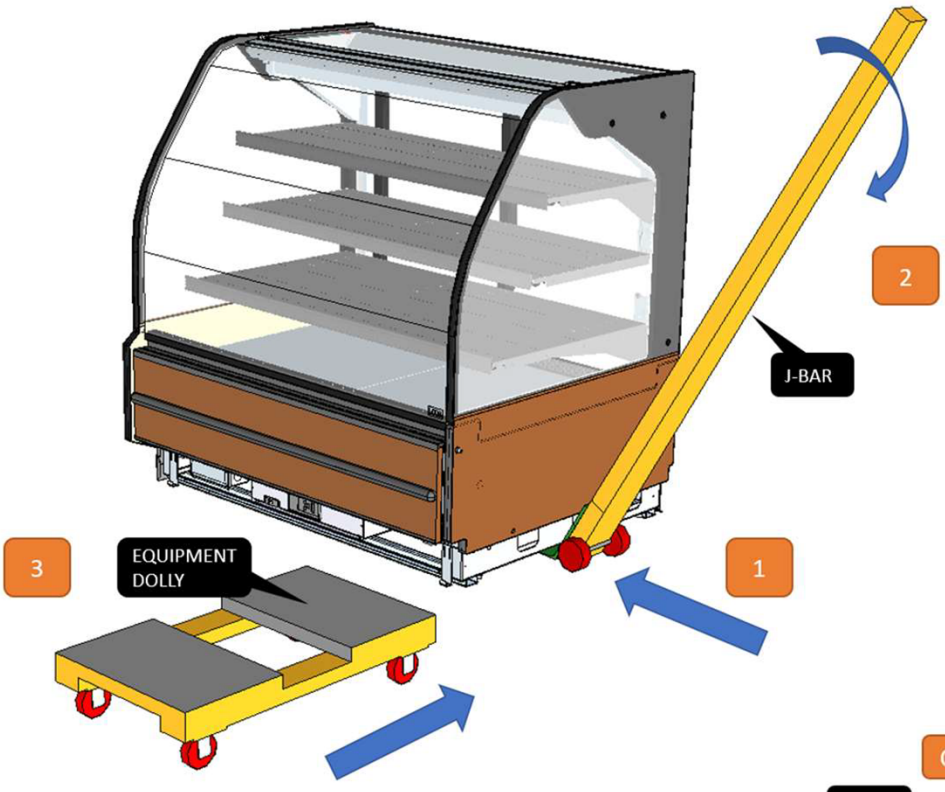

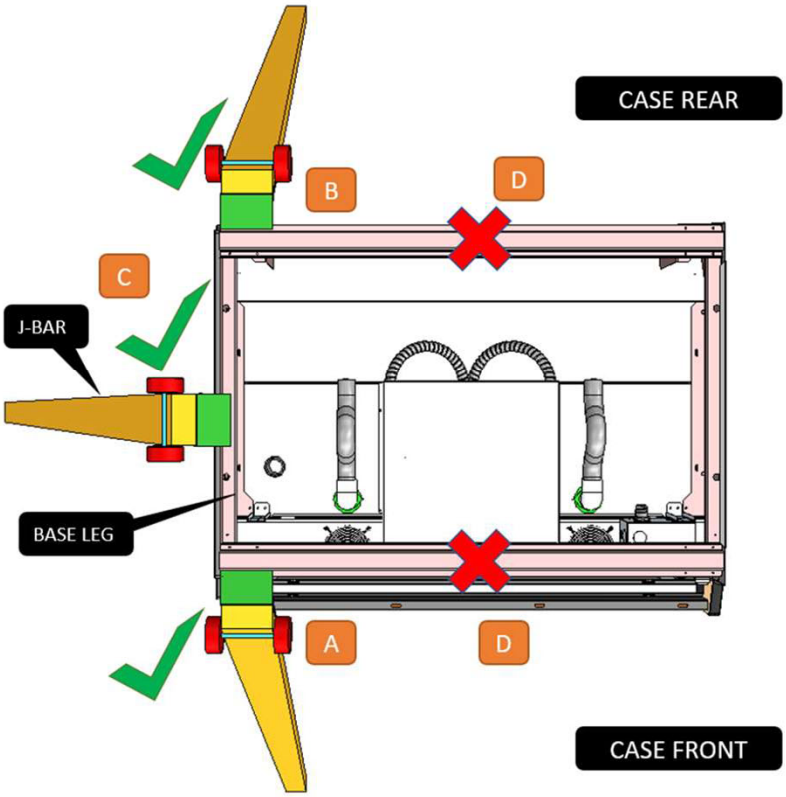

A. Safe J-Bar Lift Point at the front of the case.
B. Safe J-Bar Lift Point at the rear of the case.
C. Safe J-Bar Lift Point at the side of the case (same left or right).
D. Each base leg should be support by a dolly. Do not place dollies between base leg spans.

Installation – Lifting and Transportation – Fork-Lift Guidance

DZC Transportation using Fork-Lifts

Using J-Bars and Dollies are the preferred technique, but a Fork-Lift can be used if the special requirements stated below are met

1. Remove lower body panels before lifting with a forklift to prevent damage
2. Lift from the rear of the case if the forklift is to support all the weight. See Graphic Below.
3. **Do Not Engage Forklift from the Front of the Merchandizer. This will damage the case.**
4. Add a spacer block to the forks. See Graphic below.
5. Add a buffer between the fork backstop and merchandiser to maintain max insertion distance.
6. The case can be raised at one end under the base leg to allow for placement of dollies.

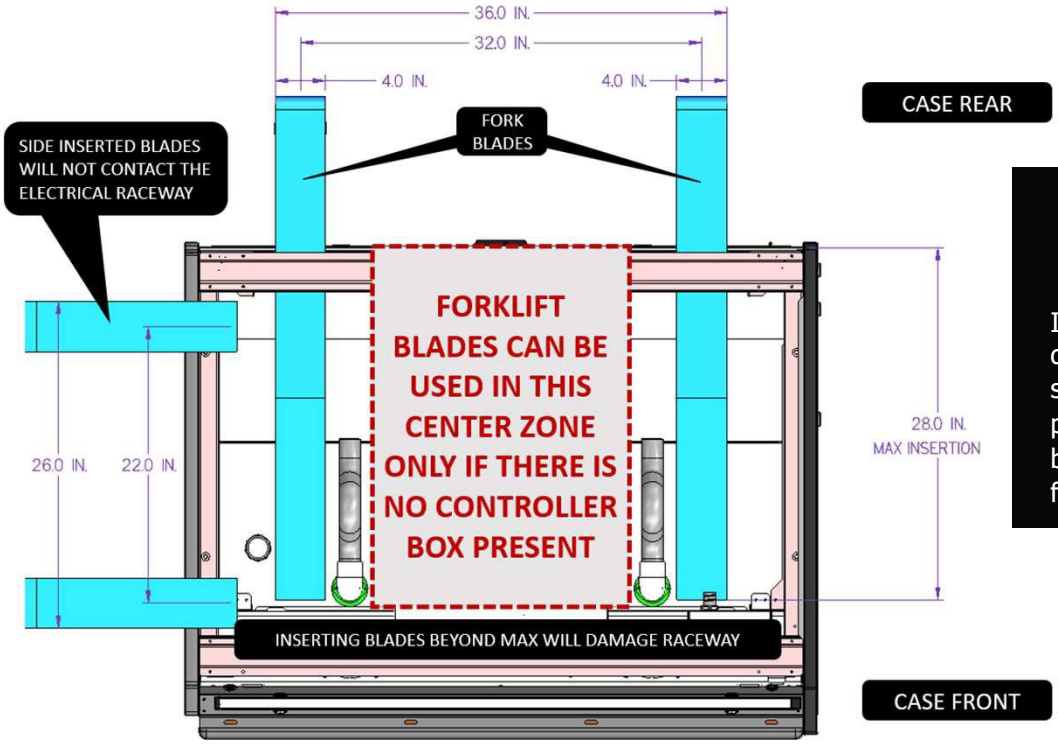

WARNING

Improper placement of forks may damage drainage piping and electrical lines. Use a spotter when placing forks. Make sure that piping will not be damaged. Use spacing buffers as shown. Use J-Bars or Jacks if forks cannot be used safely .

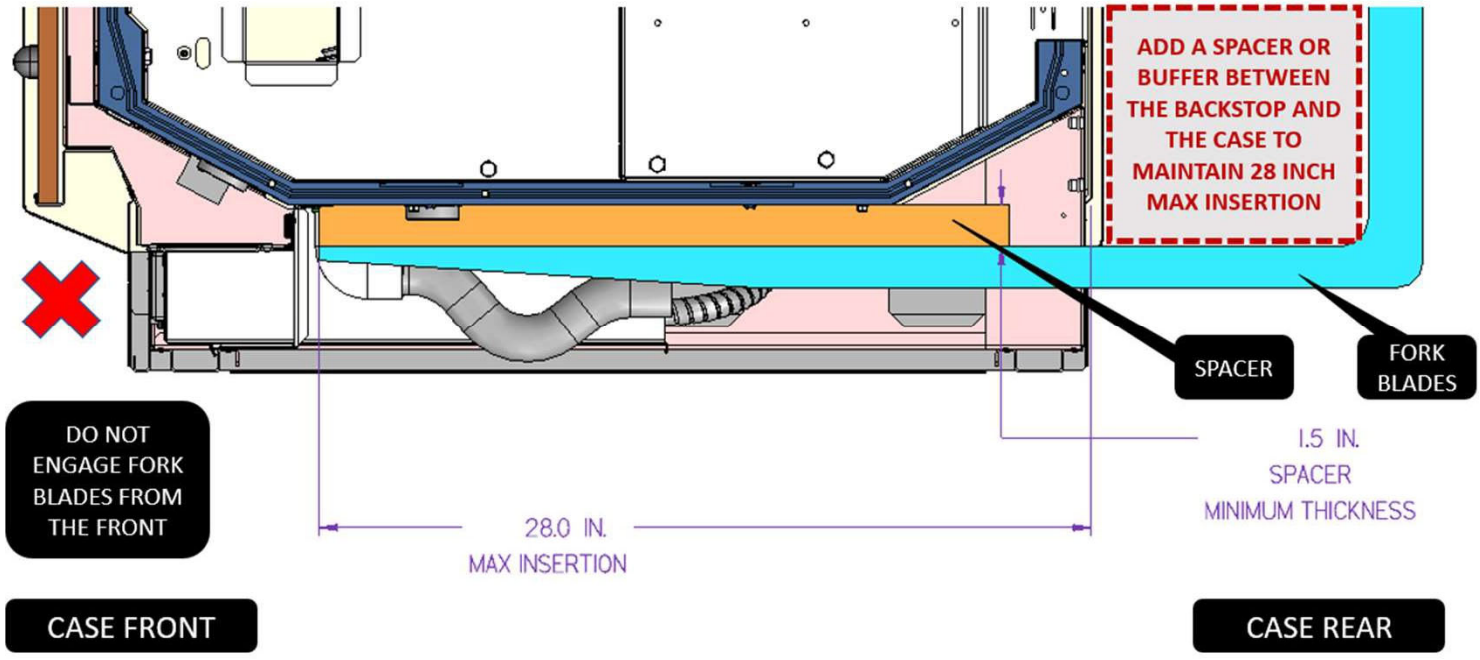

Installation – Recommended Sequence for Setting Lineups

The following sequence is Hussmann's recommendation for setting DZC lineups. Each lineup will be different, have different adjoining cases, and may require small deviations in order to complete. Plan lineups accordingly.

1. Level Adjoining Cases
- Page 11 for Guidance on Uneven Floors
- Page 12 for Leveling Method

2. Join Cases
- Page 13 for Joining Preparation and Bolting
- Page 15 for Bolting and Sealing Details

3. Adjust Glass/Canopy Upward or Downward
- Page 17 for Canopy Arm Vertical Adjustment

4. Bolt Cases Together
- Page 14 for Bolting Sequence

5. Adjust Glass Side to Side and Front to Back
- Page 18 for Front-to-Back Glass Adjustment
- Page 19 for Left-to-Right Glass Adjustment
- Page 20 for Gap/Swing Correction

6. Install Joint Trim
- Page 21 for Joint Trim Installation

7. Install Body Panels
- Page 22 for Body Panel Installation

Note: Some preparation work will be required for each step. Read through all sections prior to installation in order to understand what must be done in each step of the process

Installation – Guidance for Lineups and Uneven Floors

Examine the Floor Plan and Determine which case to set in place first. See the following example

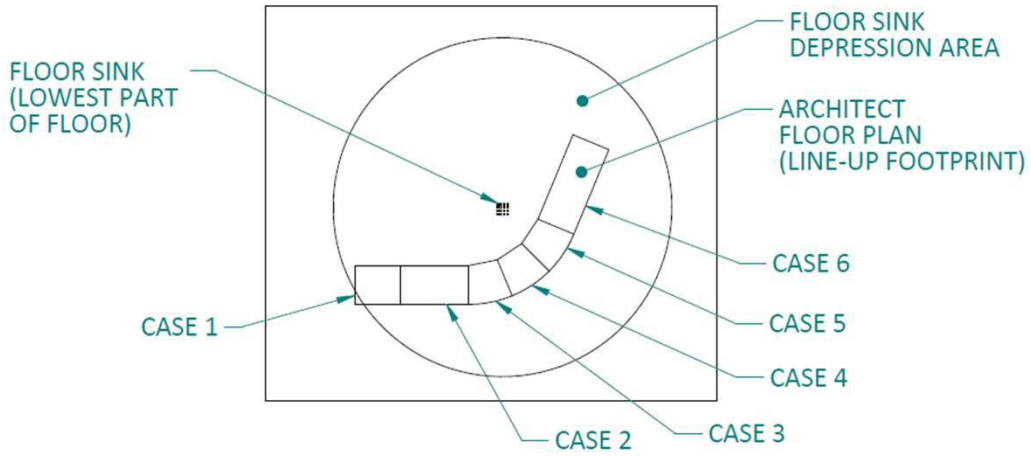

In many cases, finding the high point of the floor may be as simple as surveying the architect floorplan and checking the depressions for the floor sink.

Alternatively, using a line level or a marble can also be used to find the high point in the floor.

Always find the case in the lineup that will sit at the highest point and set that case first.

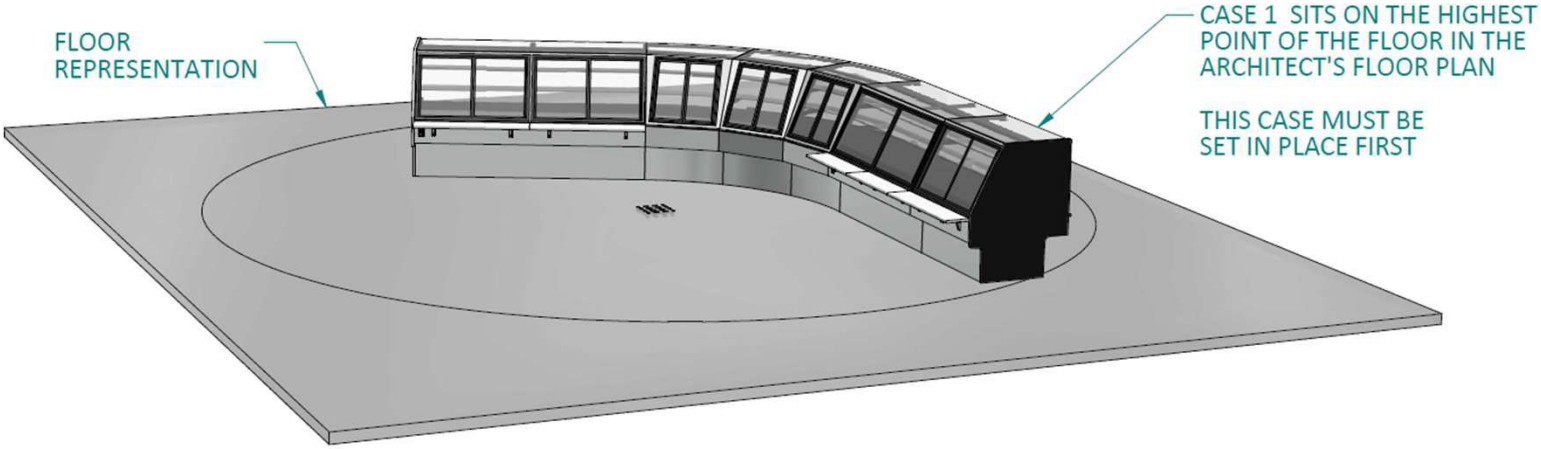

Set the first case in the lineup into its final position, then level. Once level, the adjacent case can be leveled, joined, and finally bolted and adjusted based on this case. Each subsequent case will depend on the level position of the previous case. See Joining, Bolting and Adjustment instructions for additional details.

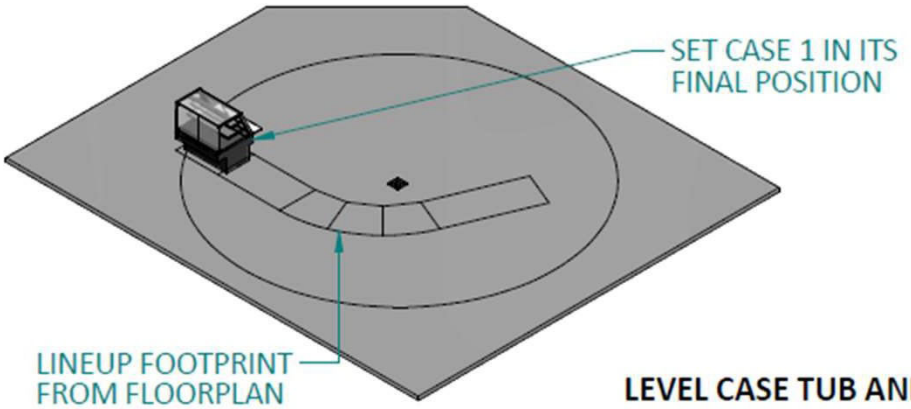

LEVEL CASE TUB AND BASE

1. **Set Case 1 in its final position according to the floorplan**
2. **Place a Torpedo Level on the left and right bulkhead**
3. **Level Case front-to-back (Check Level on Each Bulkhead)**
4. **Place a Torpedo Level across the front ledge and rear ledge**
5. **Level Case left-to-right (Check Level on Front and Rear Ledge)**

Installation – Method for Leveling DZC-V/C Merchandizers

Important: See the suggestions for setting cases on uneven floors before setting lineups and leveling cases. Using this suggestion will result in the fewest required adjustments to case levels.

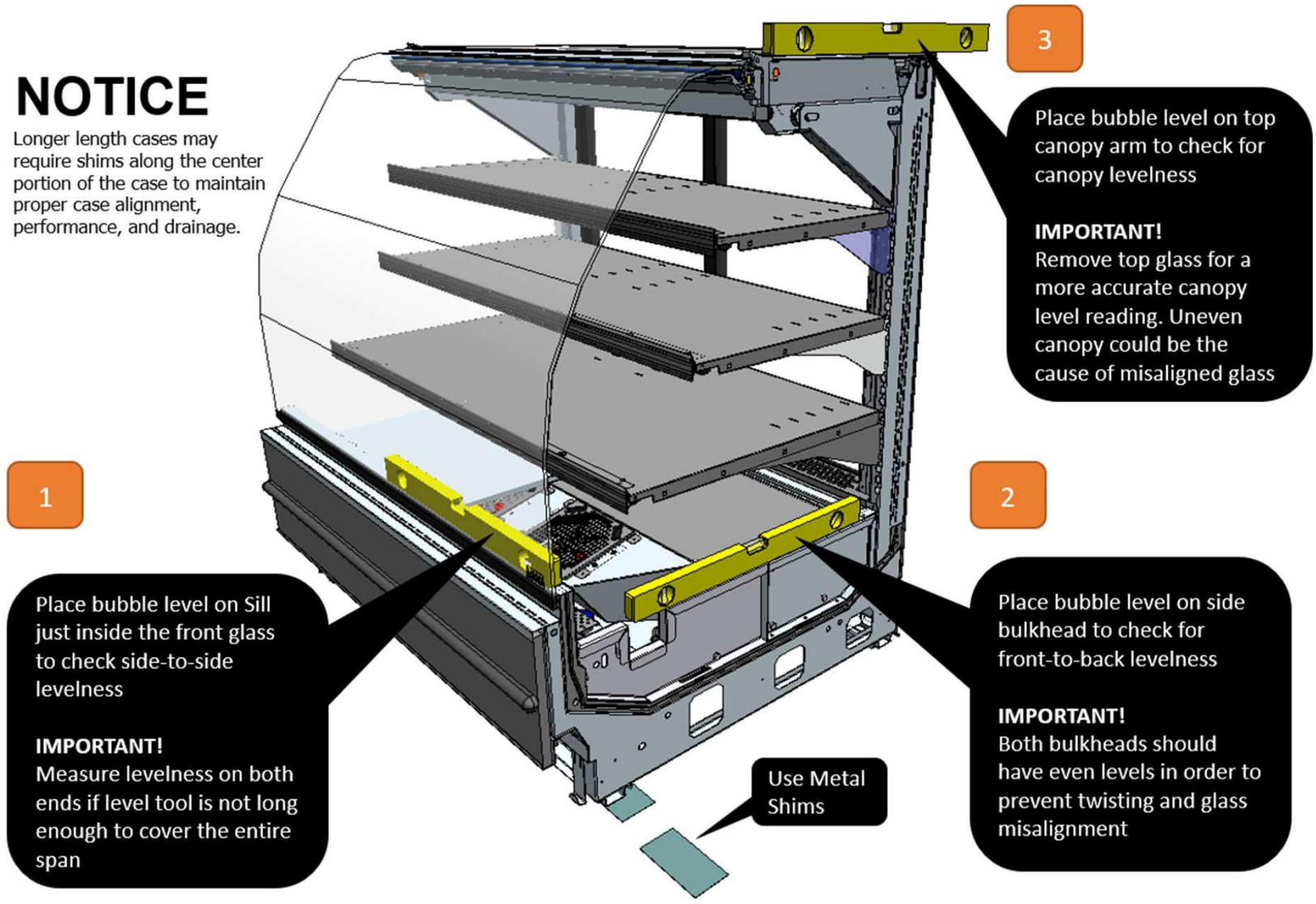

Level the Case sequentially, Using Metal Shims

1. Check levelness left-to-right first (This usually requires the most correction on a single side)
2. Adjust front-to-back levelness after ensuring left-to-right levelness (Shims normally inserted in pairs during this check)
3. Canopy Levelness should be the last check. The canopy levelness should be adjusted after the cases are joined, and prior to bolting. See 'Canopy Arm Adjustment' section on page 15.

Important: Always level the first case in the lineup. All other cases should be driven from its levels. See "Uneven Floor Guidance" for details.

Note: The use of metal shims is recommended in order to prevent shim deterioration over time

Installation – Joining and Bolting

Important: See the suggestions for setting cases on uneven floors before setting lineups and leveling cases. Using this suggestion will result in the fewest required adjustments to case levels.

1. Install Body Panel Lineup Plate (See Graphic Below)
2. Install Sealing Gasket and Butyl (See page 15 for additional details)
3. Set the 2nd case approximately 2 inches away from the 1st
4. Bring the front, bottom, and top of cases into alignment

Important: Use alignment pins/tabs and corresponding holes/slots as a guide

5. Push cases together and clamp (Use Jorgensen or similar clamp. See detail below)
6. Check levelness on the second case from front-to-back and side-to-side
7. Adjust front glass/canopy arm up or down (See Page 17)
8. Bolt cases together (See pages 14-15)

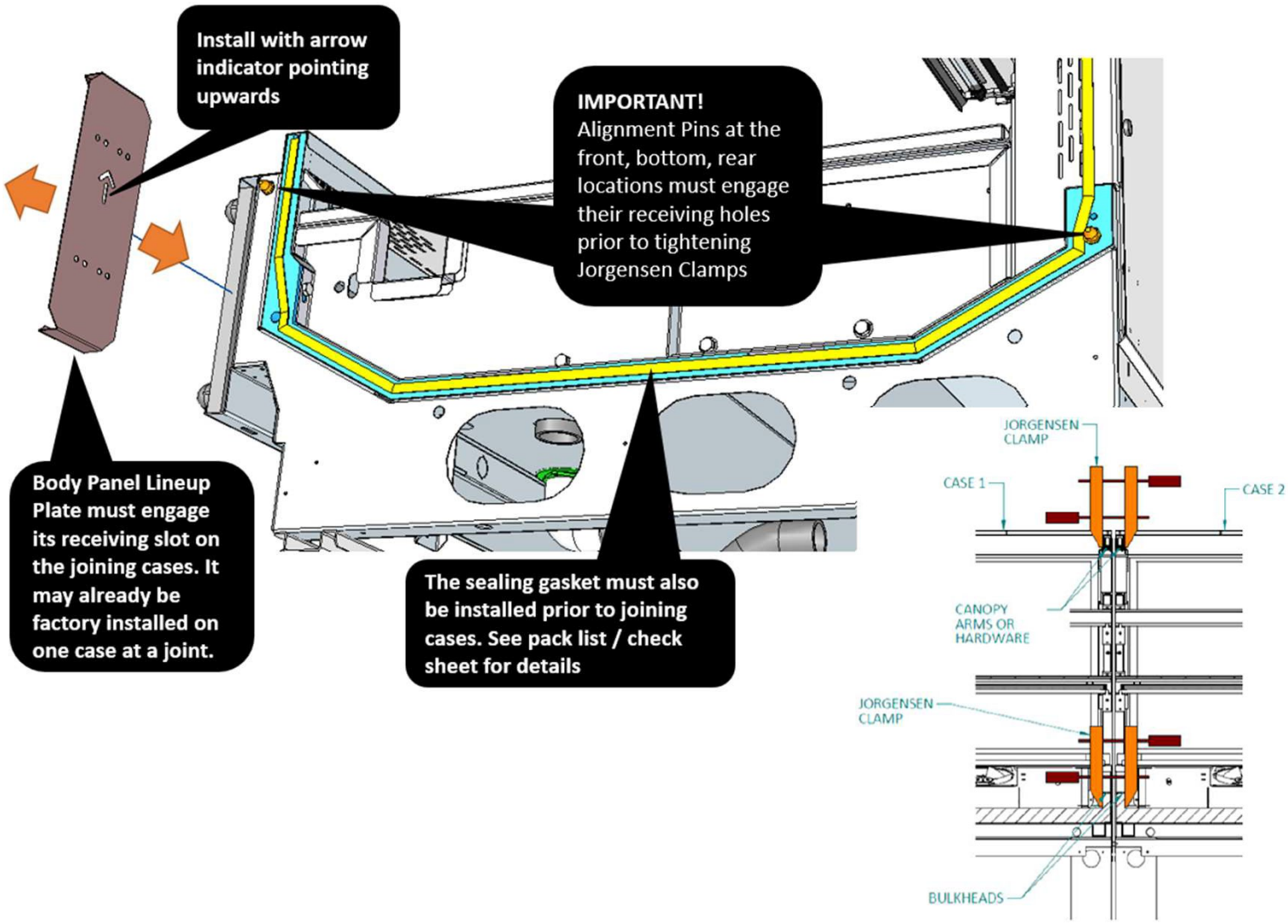

Note: Most of the clamping forces should be applied at the bulkhead or at the base legs if necessary.

The joining clamp at the top canopy may have to be installed loosely until the canopy arms can be adjusted and aligned. After alignment, tighten the clamp enough to allow bolting. Be careful not to overtighten.

Installation – Joining and Bolting – Bolting Points and Sequence

Important: See previous step. Ensure Alignment pins are engaged. Ensure gasket and or sealant is installed. Clamps should be holding the case together while the bolts/nuts are started. Remove clamps only after all 4 bolting points are snug.

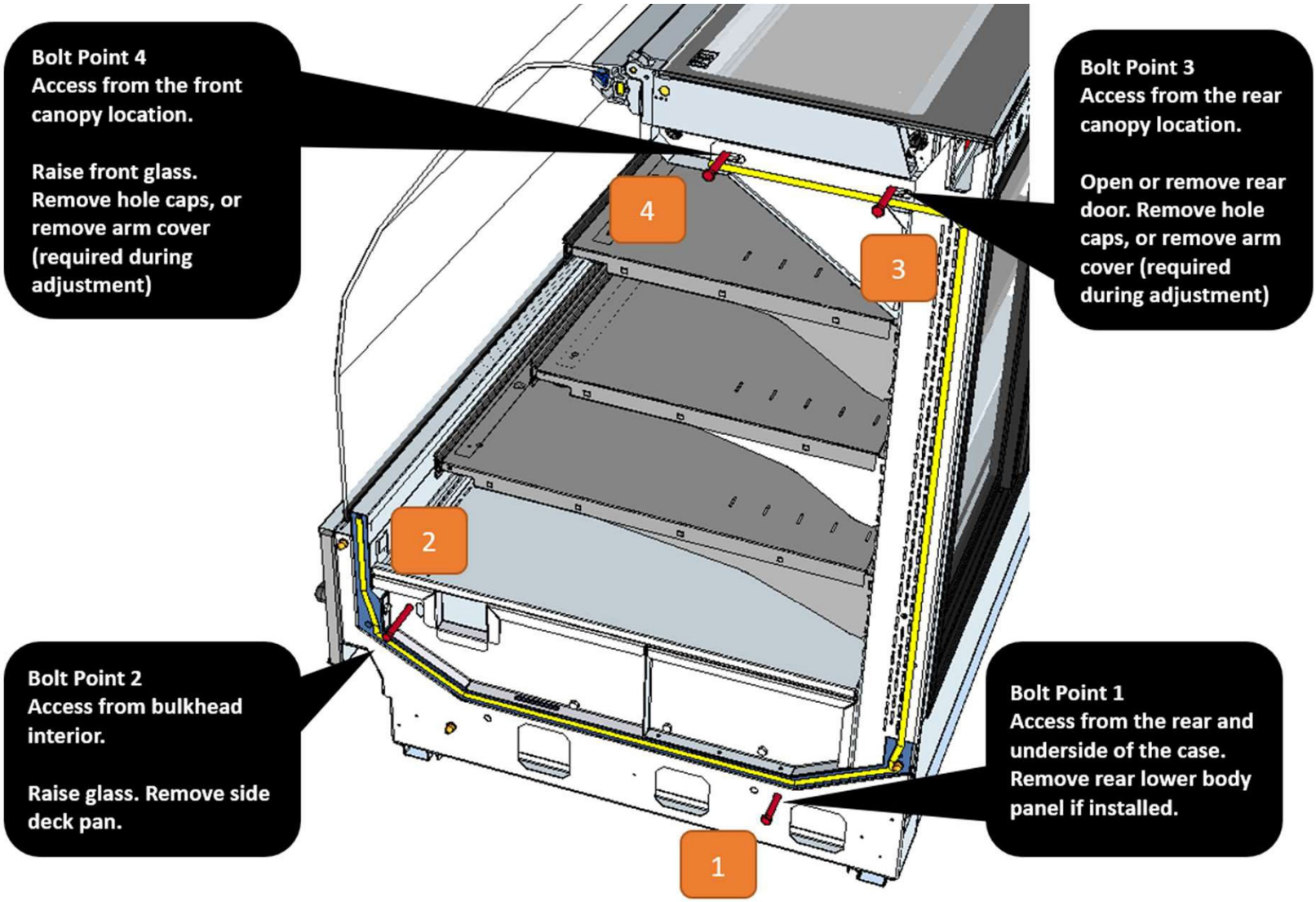

1. Bolt Sequence shown in the graphic above.
2. Start with the lower section first. Hand tighten
3. Check for alignment, Gasket pinching, or obstructions. Make corrections, as necessary.
4. Engage canopy bolts. Adjust canopy levels (See Canopy Adjustment on page 17)
5. Hand Tighten Canopy Bolts
6. Return to bolt point 1 and start to snug in sequence using a wrench or ratchet.
7. Remove Clamps. Check Joint Gaps. Correct if required. Ensure joints are sealed prior to replacing canopy covers and deck pan.

Note: Use washers on all bolt head and nuts to distribute clamping force and prevent panel crushing.

Installation – Joining and Bolting – Bolting / Sealing Detail

Important: Use this information as a supplement to the previous section

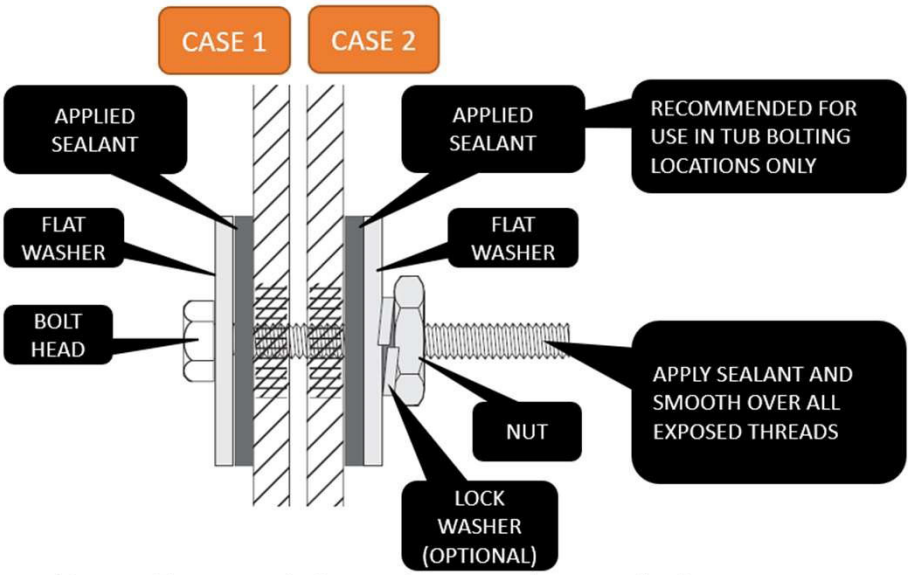

Note: Exposed threads must be sealed smooth in product areas to maintain NSF compliance

IMPORTANT

-DO NOT STRETCH GASKET, ESPECIALLY AROUND CORNERS

-TIGHTEN JOINING BOLTS ENOUGH TO COMPRESS GASKETS AND/OR SEALANT

-DO NOT OVERTIGHTEN JOINING BOLTS

-INSPECT JOINTS AFTER JOINING WITH A FLASHLIGHT. IF LIGHT CAN BE SEEN FROM THE OTHER SIDE, MORE SEALING IS REQUIRED

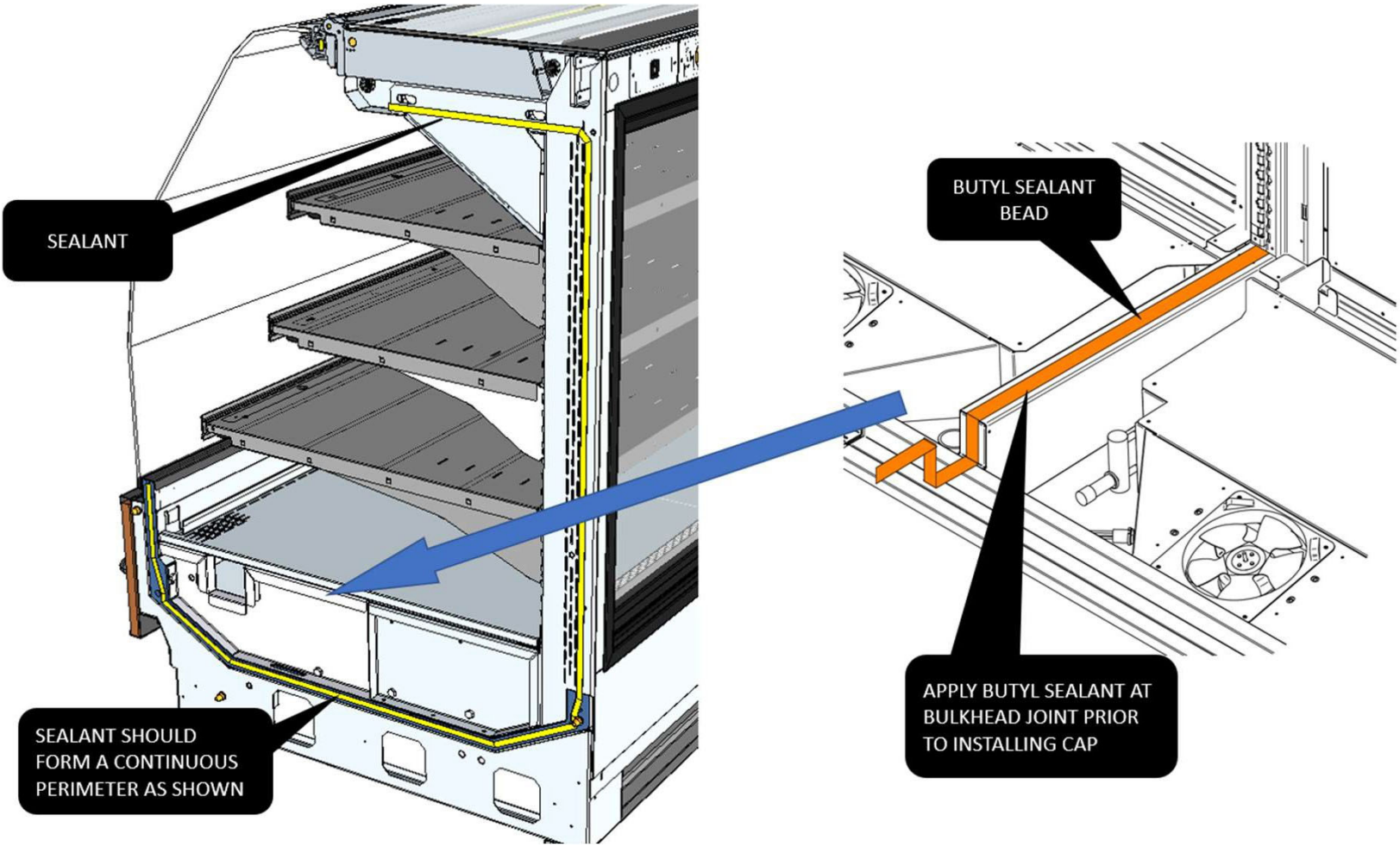

Installation – Joining and Bolting – Common and Division Ends

Important: Use this information as a supplement to the previous sections

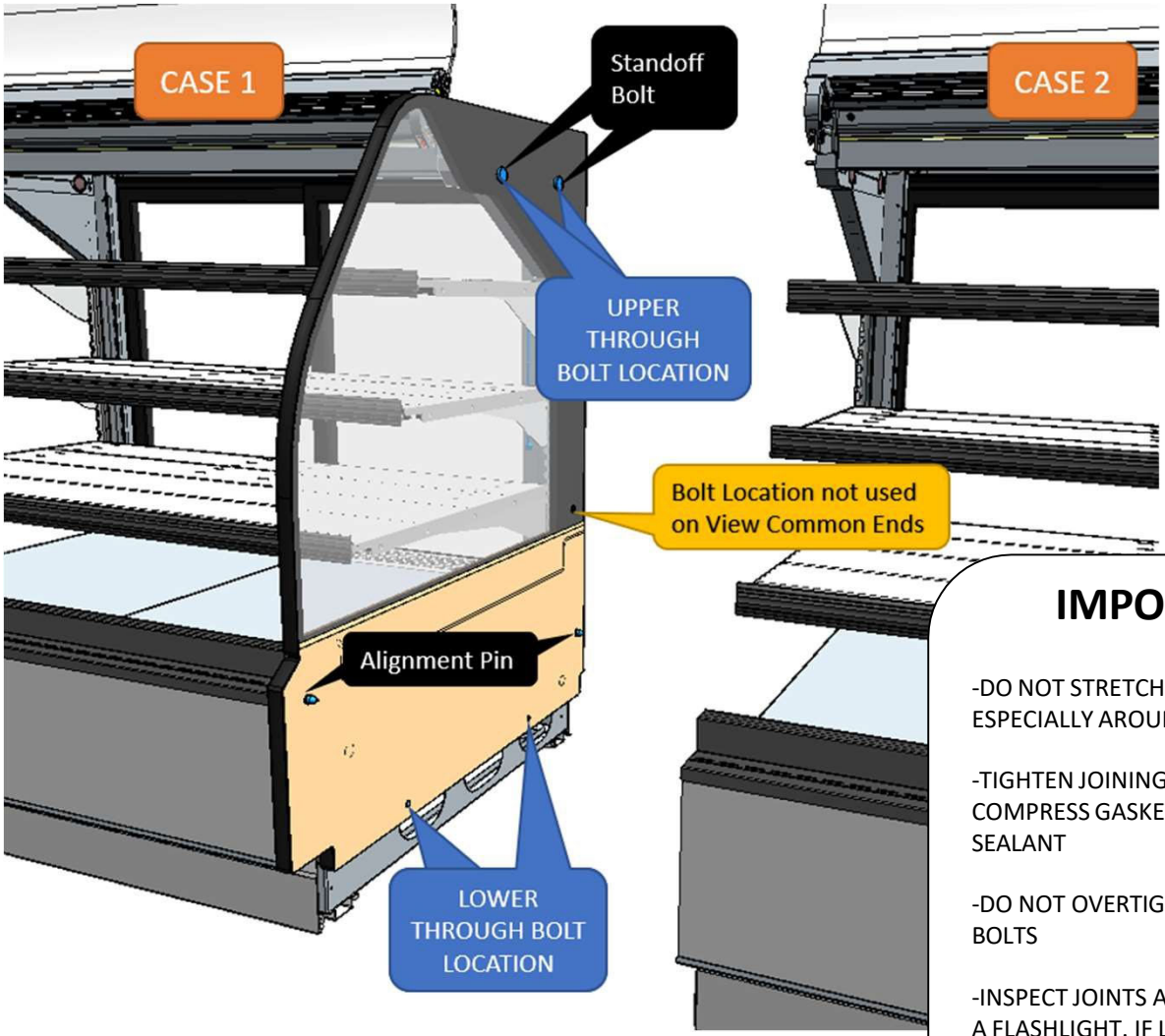

IMPORTANT

-DO NOT STRETCH GASKET, ESPECIALLY AROUND CORNERS

-TIGHTEN JOINING BOLTS ENOUGH TO COMPRESS GASKETS AND/OR SEALANT

-DO NOT OVERTIGHTEN THROUGH BOLTS

-INSPECT JOINTS AFTER JOINING WITH A FLASHLIGHT. IF LIGHT CAN BE SEEN FROM THE OTHER SIDE, MORE SEALING IS REQUIRED

1. The common/division end panel will always be attached to one case (Case #1 in this diagram)
2. Ensure gaskets are installed on Case 2 (See page 14 for details)
3. Gain access to the Upper Through Bolt locations on both cases by raising the glass and removing the bolt hole caps (See page 14 for details)
4. Gain access to the Lower Through Bolt locations on both cases by removing the front and rear lower body panels and splashguards (if applicable) (See page 22 for details)
5. Remove the standoff bolts and discard (Note: A solid division end may be bolted from the inside)
6. Bring the cases together and engage the alignment pins from the panel to Case #2
7. Join using through bolts provided in the joining kit (See page 14 and 23 for details)
8. Make glass adjustments prior to snugging upper bolts (See pages 17-19)

.

Installation – Joining and Bolting – Canopy Arm Angle Adjustment

Gaining access to the Canopy Arm adjustment hardware may require raising the front glass, opening the rear door, and removing shelves.

Settling and shifting during transportation could require that canopy levelness be adjusted. Always check for canopy levelness, and always adjust all arms of the case simultaneously to avoid twisting.

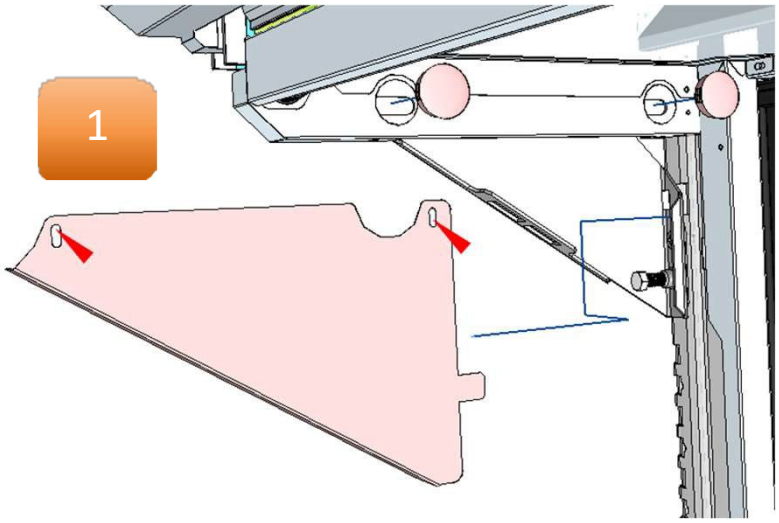

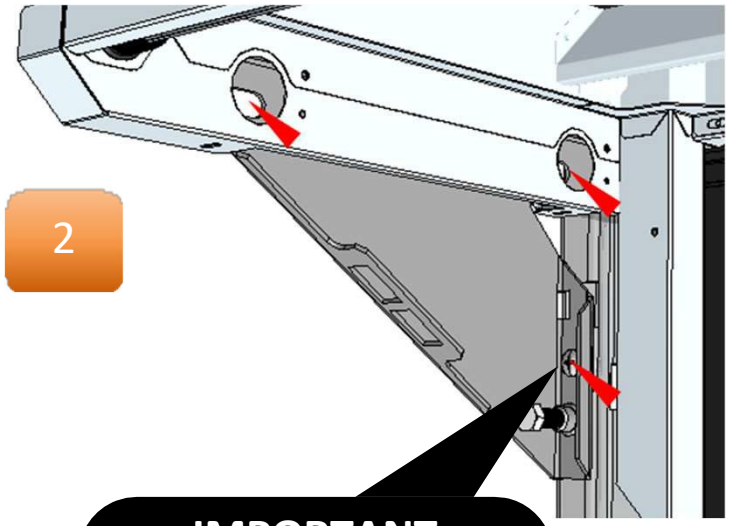

IMPORTANT

ADJUSTER ARM LOCK SCREW MUST BE LOOSENED PRIOR TO ATTEMPTING STEP 3.

DAMAGE WILL OCCUR IF IT IS NOT

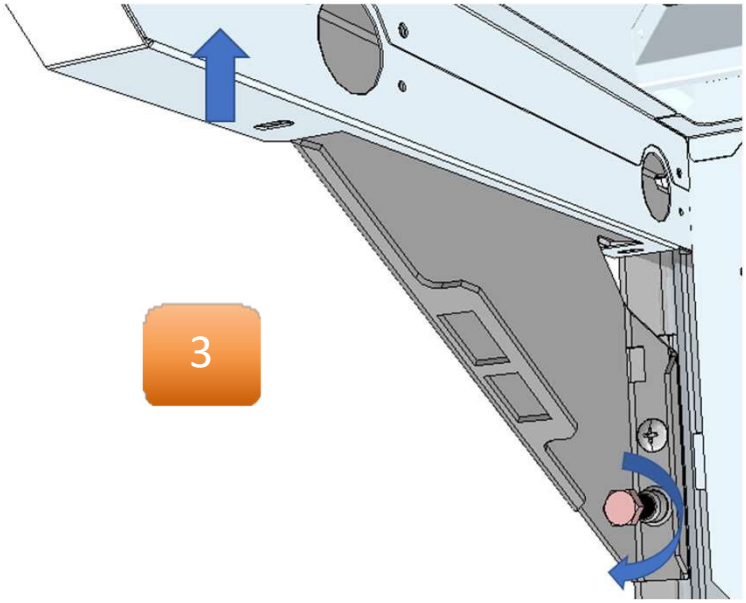

1. Remove hole caps and screws from adjuster bracket cover, then remove the adjuster bracket cover.
2. Loosen the (2) upper joining bolts [or end panel bolts], and (1) adjuster bracket lock screw
3. Turn adjuster bolt Clockwise to raise the canopy. Adjust left and right canopy brackets simultaneously.
4. After adjustment, tighten (1) adjuster bracket lock screw, and (2) end panel fastening bolts
5. Replace hole caps and adjuster bracket covers
6. For Lineups: Adjust all canopies at the same time. Ensure levelness across entire lineup. Tighten all lineup bolts, starting with the first case.

Note: Hex adjuster screw will require a 15mm (or 9/16”) socket or open-ended wrench. A deep socket with extension is recommended so that levels can be observed while adjustments are made.

Installation – Front Glass Adjustment – Front-to-Back

Important: Before attempting any glass adjustment, ensure the case being adjusted is level left-to-right and front-to-back.

Unlevel case chassis will result in a twisted frame and odd glass gaps

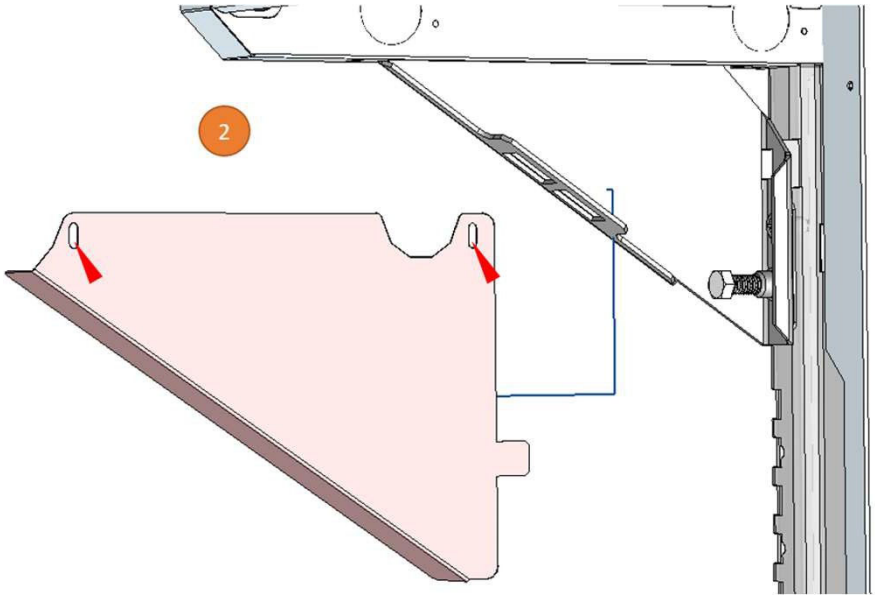

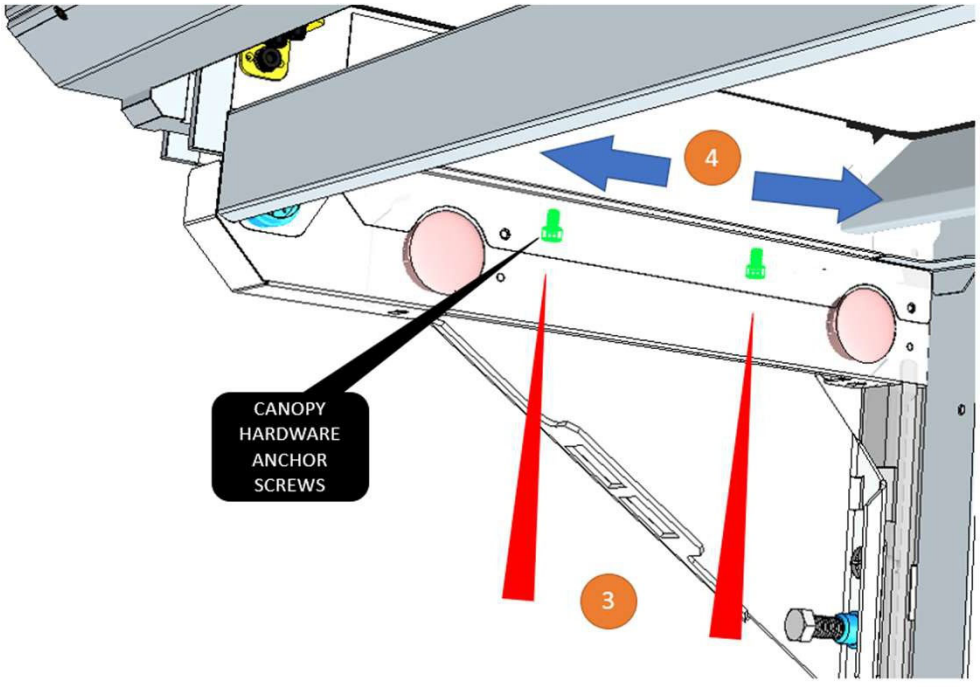

WARNING

-DO NOT ATTEMPT TO ADJUST FRONT-TO-BACK BY SHIFTING THE GLASS IN ITS CLAMP

-DOING SO MAY RESULT IN POORLY SUPPORTED GLASS, AND EVENTUAL GLASS BREAKAGE THAT CAN CAUSE INJURY

Front to Back Glass Adjustment is achieved by moving the Canopy Arm forward or backward.

1. Raise the front glass to its maximum opening.
2. Remove the indicated screws and the Canopy Arm Adjuster Bracket Cover.
3. Access the Allen Head Bolts that anchor the Canopy Hardware and loosen. Do not remove.
4. Physically move the canopy arm forward or backward. Canopy arms should be moved in pairs in order to keep the glass square.
5. After adjustment is complete, tighten Allen Head Bolts and replace arm covers.

Installation – Front Glass Adjustment – Left-to-Right

Important: Before attempting any glass adjustment, ensure the case being adjusted is level left-to-right and front-to-back.

Unlevel case chassis will result in a twisted frame and odd glass gaps. Check for a twisted chassis. Make corrections to twist as shown on page 19 prior to Left-to-Right Adjustments

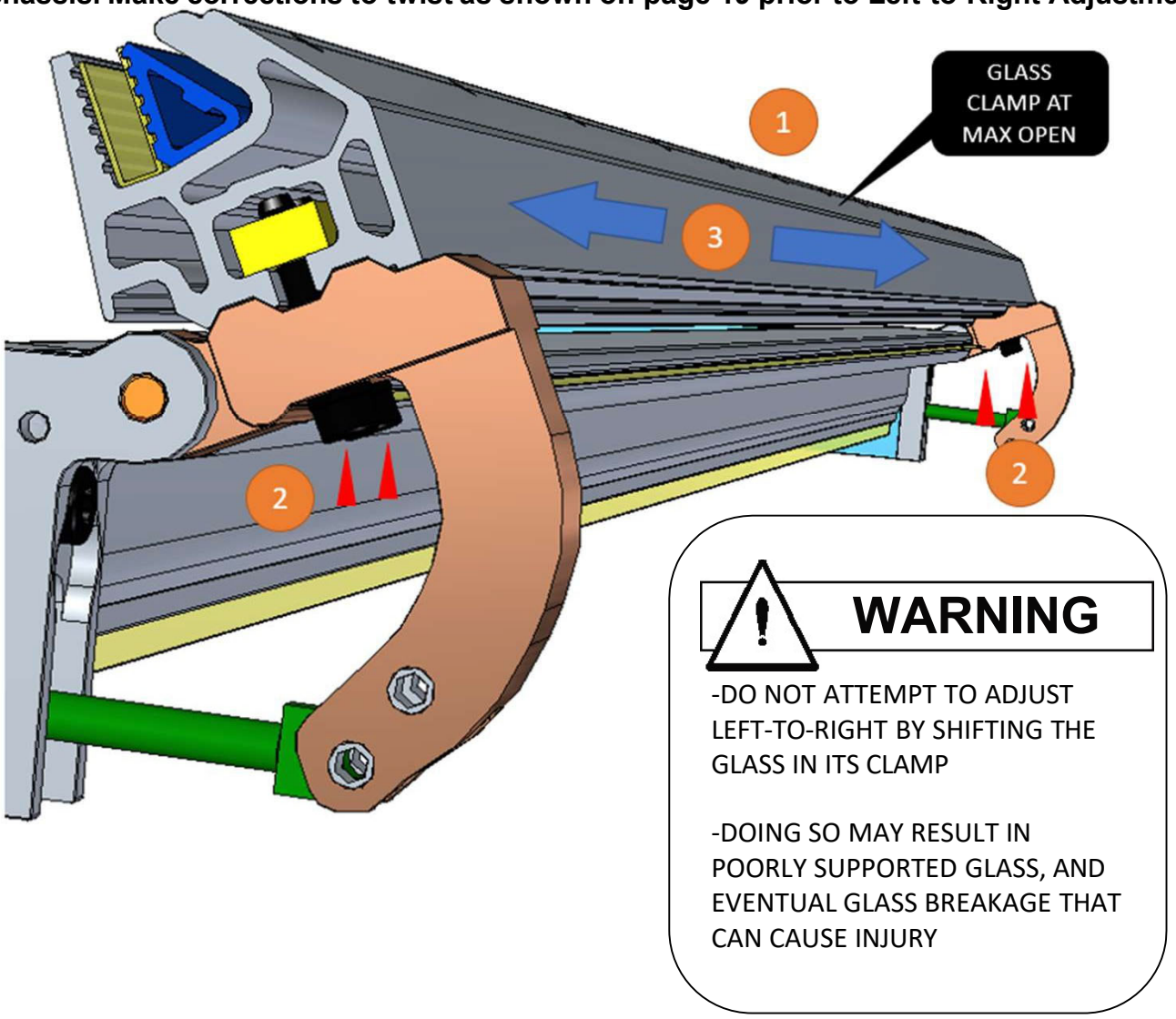

WARNING

-DO NOT ATTEMPT TO ADJUST LEFT-TO-RIGHT BY SHIFTING THE GLASS IN ITS CLAMP

-DOING SO MAY RESULT IN POORLY SUPPORTED GLASS, AND EVENTUAL GLASS BREAKAGE THAT CAN CAUSE INJURY

Left-to-Right Glass Adjustment is achieved by moving the entire glass and clamp assembly in its mount

1. Raise the front glass to its maximum opening.
2. Access and Loosen the Allen Head Bolts that anchor the Glass Clamp to the Hardware Lift Arms.
3. Using assistance, physically move the Glass Clamp + Glass Left or Right. Adjustment range is limited.
4. Snug Allen Head bolts, then check glass position by lowering and raising glass.
5. After final desired position is achieved, fully tighten Allen Head Bolts.

Note that up and down glass adjustment can be achieved by raising and lowering the canopy arm angle. See Canopy Arm Adjustment on page 17.

Installation – Glass Adjustment – Correcting Uneven Gaps or Swing

Important: Uneven gaps are normally caused by a case that is twisted by an uneven floor or that is unevenly leveled. Make corrections as follows

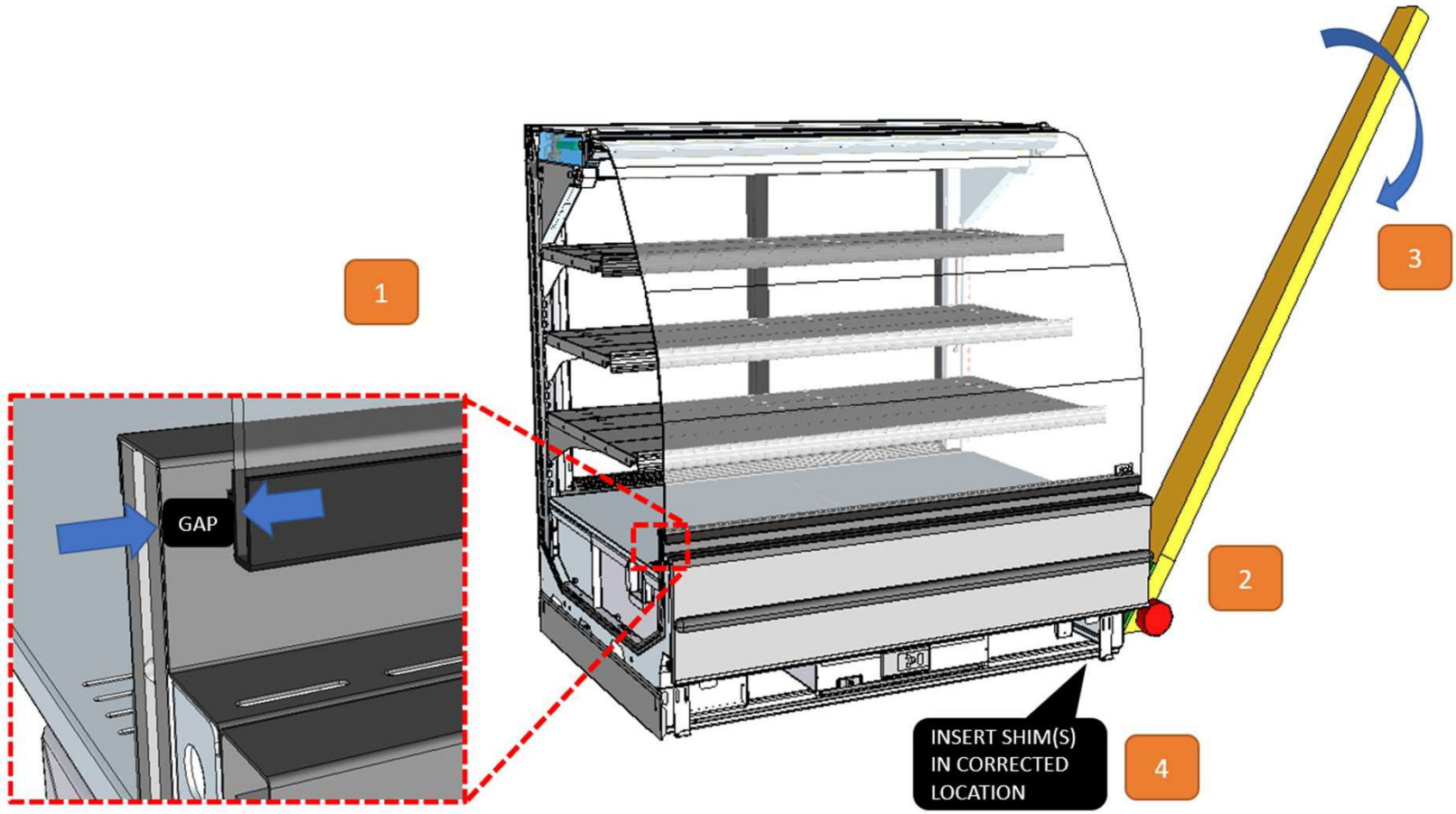

1. Identify Uneven gap or an out of parallel swing condition.
- Check the gap at the lowest edge of the glass in relation to the tub or end panel.
- Check the gap at the highest edge of the glass in relation to the canopy or end panel.
- If the gap is uneven (for example, larger at the bottom than the top), then correction is required.

2. Place a J-Bar at the end of the case away from the identified gap, near the front of the case.
3. Lift case only as much as necessary to correct the gap.
4. Maintain lift by supporting lifted edge with metal shims.

See details on Leveling cases on page 12.

Installation – Joint Trim – Shipped Loose to Job Items

Cases in lineups have been shipped with a Loose to Job vacuum packed kit. Locate that kit and identify parts before installing joint trim. See the following page.

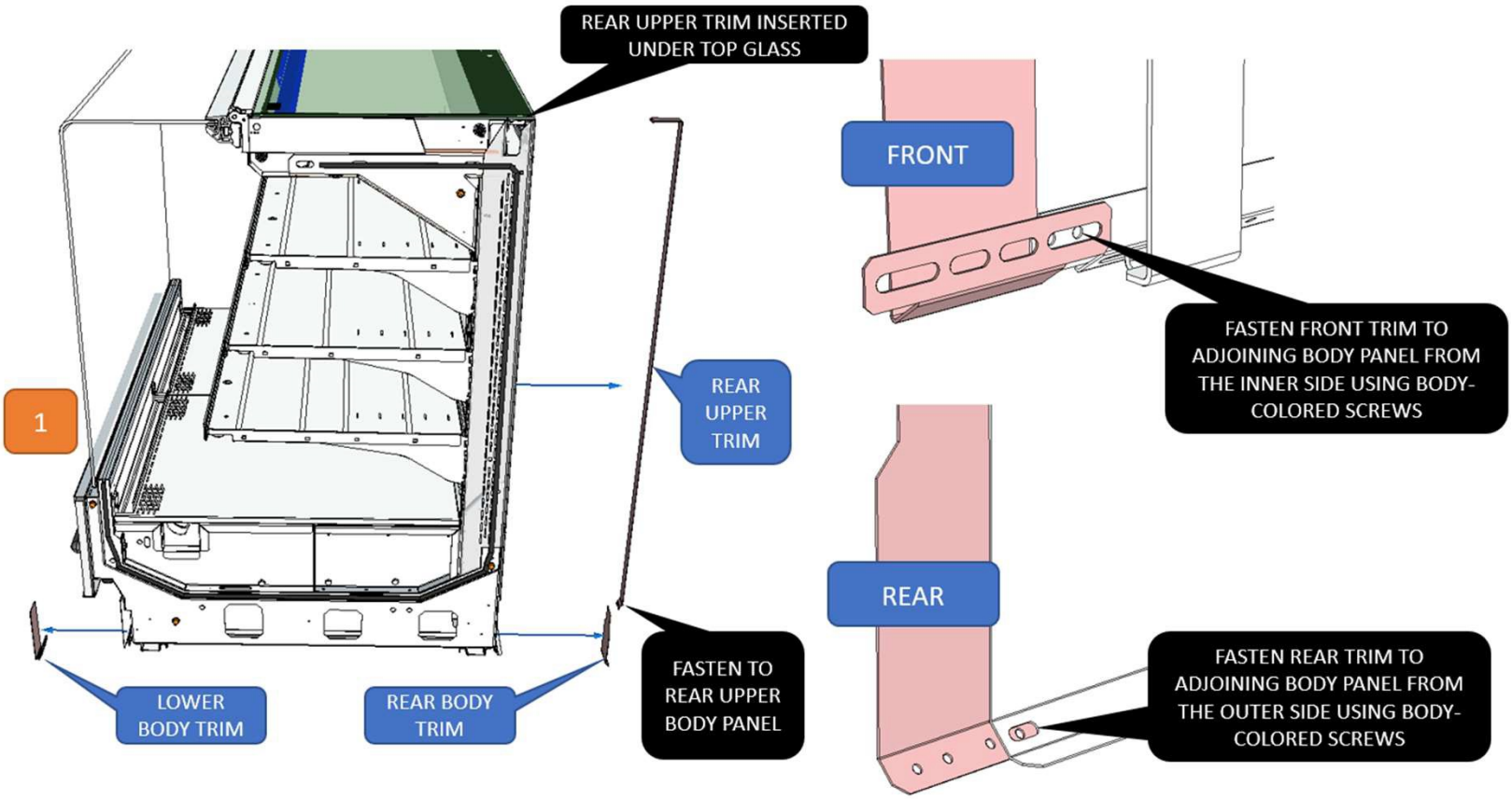

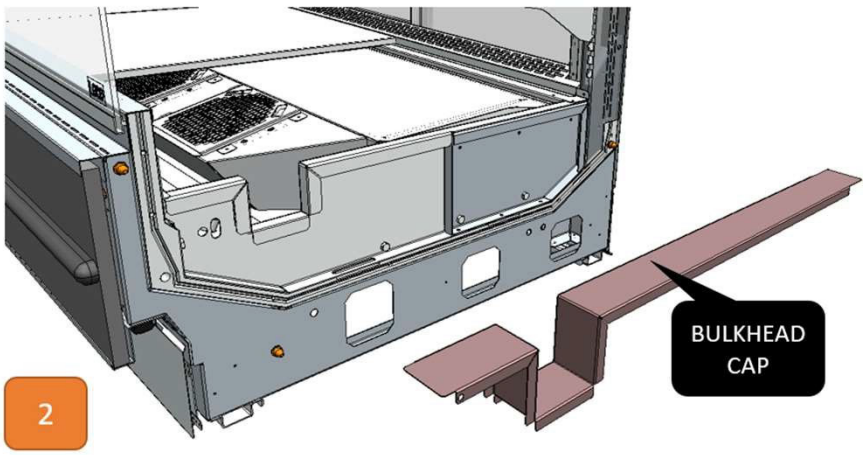

IMPORTANT

-SEE PAGE 15 FOR SEALING DETAILS.
-USE BUTYL SEALANT PRIOR TO INSTALLING THIS PART.

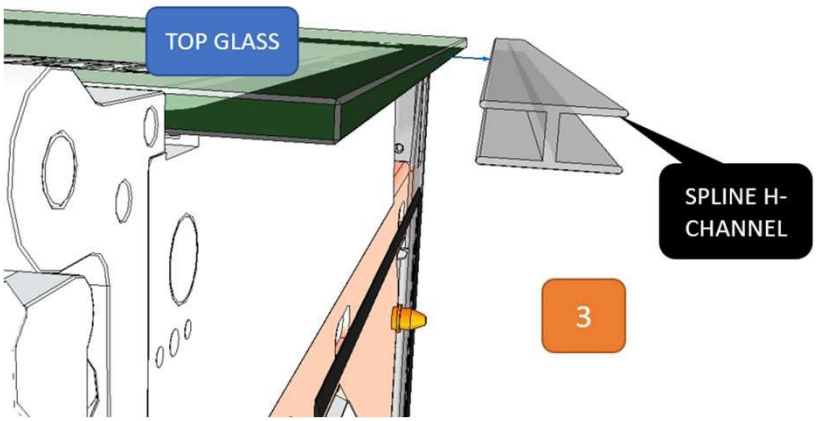

Installation – Installing Body Panels

Installing Front Body Panel

No tools will be required in order to install front body panels

See the section of this manual titled “Access to J-Box / Controller Box / Drains” on page 31 for front body panel installation instructions.

Installing Rear and Side Body Panel

A Philips Screwdriver / Drill bit will be required in order to install or remove Rear and Side Body Panels
Fasten at indicated locations

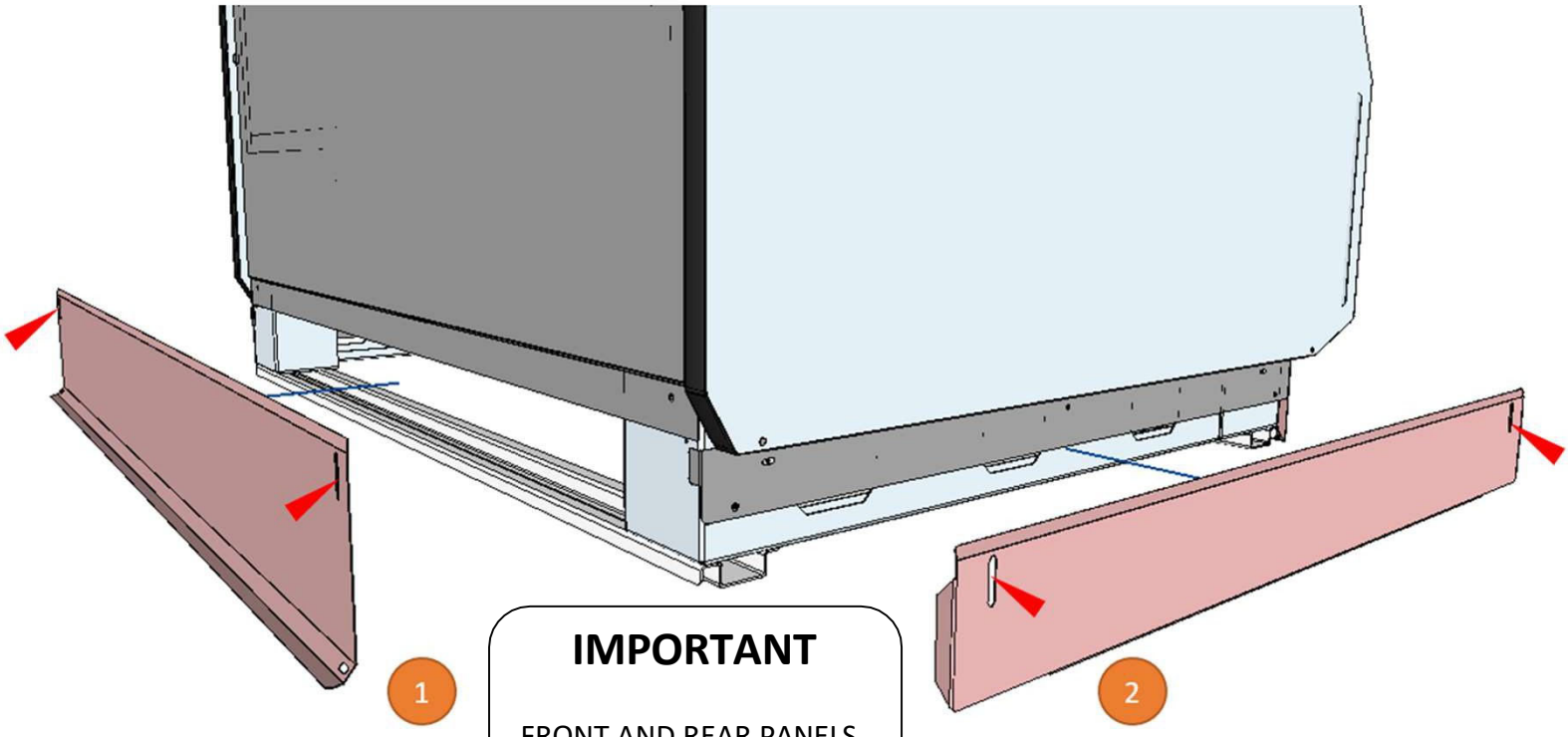

1. Rear Body Panel
2. Side Body Panel (For Lineups, these parts are installed only on the end cases)

Fasten with Panel-colored self-tapping screws

DZC-V/C/S-R SLTJ DOCUMENT

DOCUMENT DETAILS: PART # CS00034

INSPECTOR: _____

SALES ORDER# _____

EXTERIOR COLOR: _____

INTERIOR COLOR: _____

GRAPHIC	OPTION	VIEW	CHK	PART #	DESCRIPTION	QTY
A	LINE UP ONLY	POWDERCOAT: BLK	☐	3122960	JOINT TRIM-BULKHEAD CAP	1
B		POWDERCOAT: BLK	☐	3108235	LINE UP PLATE-CASE TO CASE	1
C		REAR EXT COLOR	☐	3122959	JOINT TRIM-REAR EXTERIOR	1
		STAINLESS	☐			
D		CASE INT COLOR	☐	3155598	JOINT TRIM-TOP CNT ARM (DZC-S/C)	1
		STAINLESS	☐			
		CASE INT COLOR	☐	3155599	JOINT TRIM-TOP CNT ARM (DZC-V)	
		STAINLESS	☐			
E		FRNT PNL COLOR	☐	3108238	JOINT TRIM-LOWER FRONT BODY PANEL	1
		STAINLESS	☐			
F		REAR C/OFF COLOR	☐	3108239	JOINT TRIM-REAR CLOSEOFF	1
		STAINLESS	☐			
G			☐	0376408	ALIGNMENT PIN	2
H	BOLTING: CASE TO CASE (NO END PANEL)		☐	0000416	BOLT, 3/8 - 16 X 1"	2
I			☐	300-03-0870	BOLT, 3/8 - 16 X 2 1/2"	2
J	BOLTING: CASE WITH END PANEL (COMMON, DIVISION, & FLOW-THRU)		☐	300-03-0870	BOLT, 3/8 - 16 X 2 1/2"	4
K			☐	300-03-1370	NUT, 3/8 - 16	4
L			☐	300-03-1315	WASHER, 5/16"	8
M	STANDARD PART		☐	0462289	DRAIN SCREEN	2
N			☐	2H11847650	GASKET SEAL TAPE	8 ft

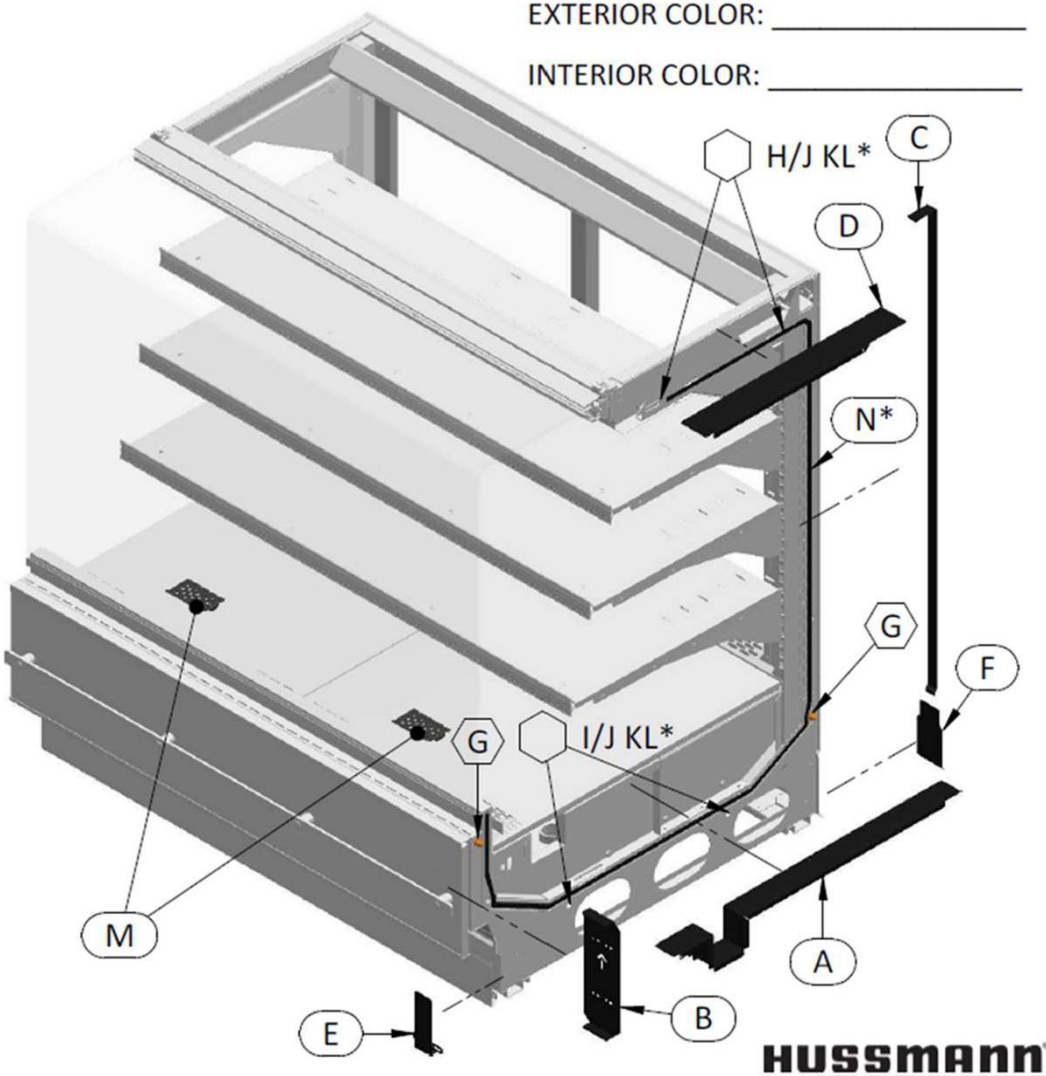

*SEE INSTALLATION GUIDE

⬡ INDICATES CASE BOLTING/ALIGNMENT POINT

HUSSMANN

REV D 09/14/2022

Note: Items A – F are normally pre-installed on the case

Refrigeration

Refrigerant

The correct type of refrigerant will be stamped on each merchandiser's serial plate. See the following graphic for serial plate location.

The case refrigeration piping is pressurized with a nitrogen holding charge, leak tested, and factory sealed.

Before making refrigeration connections, depress universal line valve (Shraeder Valve) to ensure that coils have maintained pressure during shipment. If system pressure was not maintained, contact your Hussmann Service Technician for further assistance.

⚠ CAUTION

Refrigeration lines are under pressure. Refrigerant must be recovered before attempting to make any connections.

Refrigeration Piping

The refrigerant line connections are at the right side of the case (as viewed from the front) under the deck-pans. The merchandiser will have a through-hole in the tub liner that allows lines to exit the merchandiser for liquid and suction line connections. After connections have been made, make certain to seal this outlet thoroughly (if not sealed at factory already). Seal both the inside and outside. We recommend using an expanding polyurethane foam insulation to fill large gaps, then finishing the seal with a Silicone type sealant to prevent any water leaks.

Line Sizing

Refrigerant lines should be sized as shown on the refrigeration legend that is furnished for the store or according to the ASHRAE guidelines.

Oil Traps

Oil traps must be installed at the base of all suction line vertical risers on refrigerated cases.

P-Traps

P-TRAPS must be installed at the base of all refrigerated cases. The 1 ½" P-TRAP and threaded adapter must be installed to prevent air leakage and insect entrance into the fixture.

ATTENTION INSTALLER

It is the contractor's responsibility to install case(s) according to local construction and health codes.

WARNING!

Do NOT apply thread sealer to ABS P-Trap.

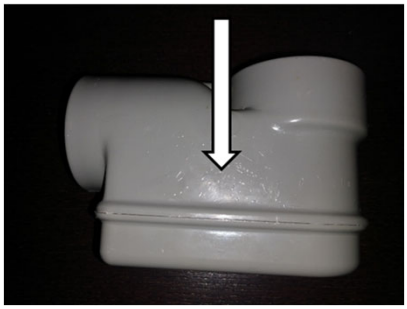

Specifications

BAKERY / CAKE SERVICE REVISION DATE 09/13/22

HUSSMANN - DZC-V-R

DOE 2017 Energy Efficiency Compliant

Hussmann refrigerated merchandisers configured for sale for use in the United States meet or surpass the requirements of the DOE 2017 energy efficiency standards.

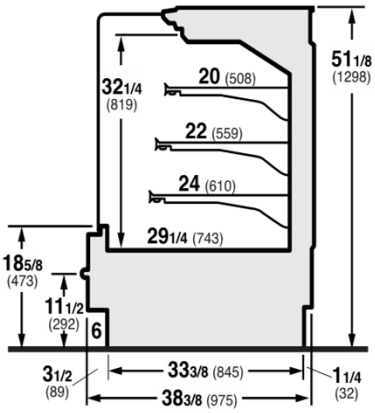

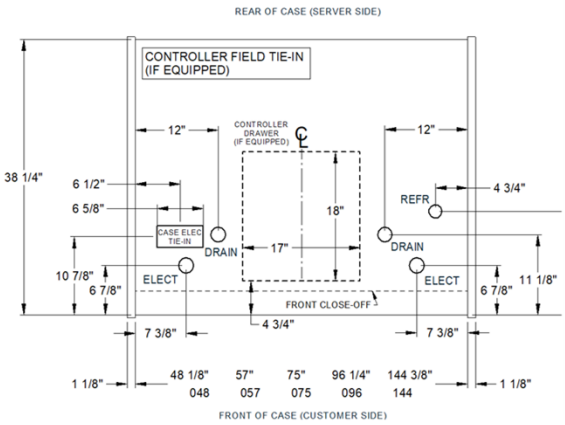

REFRIGERATION DATA:

CASE LENGTHS	CASE USAGE	CAPACITY *** (BTU/HR/FT)		TEMPERATURE (°F)			VELOCITY (FT/MIN)
		RATING CONDITION		EVAPORATOR		DISCHARGE AIR ** (°F)	
		NSF 7	AHRI	NSF 7	AHRI	NSF 7	NSF 7
048, 057, 075, 096, 144	BAKERY	500	500	22	22	25~27	270 ~ 350

CASE LENGTH	20°F GLYCOL 6° RISE	
	GPM	PSI
048	0.8	2.2
057	0.9	3.1
075	1.2	1.6
096	1.5	1.6
144	2.1	1.5

****FRONT DISCHARGE AIR MEASURED INSIDE AIR CURTAIN HONEYCOMB**

*****REFRIGERATION NOTES:**

1) BTU'S INCLUDE TWO ROWS OF CANOPY LIGHTS. ADD 10 BTUS/SHELF/FT FOR EACH SHELF (LIGHT)
2) AHRI 1200 RATING POINT FOR ENERGY CONSUMPTION COMPARISON ONLY
3) USE DEW POINT FOR HIGH GLIDE REFRIGERANTS. CARE SHOULD BE TAKEN TO USE THE DEW POINT IN P/T TABLES FOR MEASURING AND ADJUSTING SUPERHEAT. ADJUST EVAPORATOR PRESSURE AS NEEDED TO MAINTAIN THE DISCHARGE AIR TEMPERATURE SHOWN.
4) RATING CONDITION IS NSF TYPE I, 75°F/55% RH

REFRIGERATION DATA CONTINUED:

ELEC. THERMOSTAT / AIR SENSOR SETTINGS			DEFROST TYPE	TIME (MIN)	DEFROST FREQUENCY (#/DAY)	TERM. TEMP (°F) COIL ONLY	DRIP TIME	DEFROST WATER (LBS/DAY/FT)
USAGE	CUT IN (°F)	CUT OUT (°F)						
DELI / BAKERY	26	23	OFF TIME	30	6	45	N/A	0.8

END PANEL WIDTH KEY		
# OF END PNLS	END PNL WIDTH (IN.)	TOTAL ADDED LENGTH (IN.)
1	1.125	1.125
2	1.125	2.25

ELECTRICAL DATA:

STANDARD FANS, HEATERS, LED LIGHTS (115 VOLT)

CASE LENGTH	EVAP					AIRSWEEP FANS			CANOPY LIGHTS LED		OPTIONAL LED SHELF LIGHTS		MAX. LED LOAD (W/ ALL OPTIONS)		ANTI-SWEAT HEATERS	
	# OF EVAP FANS	BLADE DIA. (IN.)	BLADE PITCH	AMPS	WATTS	# OF FANS	AMPS	WATTS	AMPS	WATTS	AMPS	WATTS	AMPS	WATTS	AMPS	WATTS
048	2	6.7	25	0.2	16	1	0.04	5	0.4	41	0.4	41	0.7	82	1.0	120
057	2	6.7	25	0.2	16	1	0.04	5	0.5	54	0.4	41	0.8	95	1.1	123
075	3	6.7	25	0.4	24	2	0.08	9	0.6	71	0.5	61	1.1	132	1.6	180
096	3	6.7	25	0.4	24	2	0.08	9	0.7	81	0.7	82	1.4	164	2.1	240
144	6	6.7	25	0.7	48	3	0.12	14	1.1	122	1.1	124	2.1	246	3.1	360

OPTIONAL HIGH OUTPUT LED LIGHTS (115 VOLT)

CASE LENGTH	CANOPY LIGHTS H.O. LED		OPTIONAL SHELF		MAX. H.O. LED LOAD	
	AMPS	WATTS	AMPS	WATTS	AMPS	WATTS
048	0.4	41	0.5	61	0.9	102
057	0.5	54	0.5	61	1.0	114
075	N/A	N/A	N/A	N/A	N/A	N/A
096	0.7	81	1.1	122	1.8	203
114	0.9	107	1.1	122	2.0	229
144	1.1	122	1.6	183	2.6	305

Optional outlets

CONVENIENCE OUTLETS		
# OUTLET	VOLTS	AMPS
1	115	15
1	115	15
1	115	15
1	115	15
1	115	15
2	115	30

Specifications

BAKERY / CAKE SERVICE REVISION DATE 09/13/22

HUSSMANN - DZC-C-R

DOE 2017 Energy Efficiency Compliant — Hussmann refrigerated merchandisers configured for sale for use in the United States meet or surpass the requirements of the DOE 2017 energy efficiency standards.

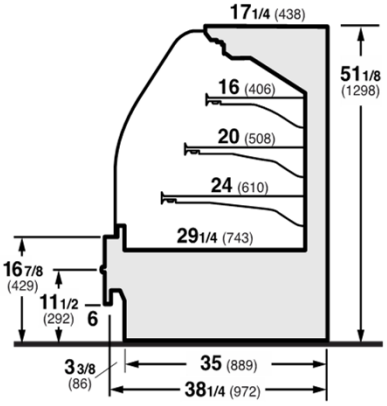

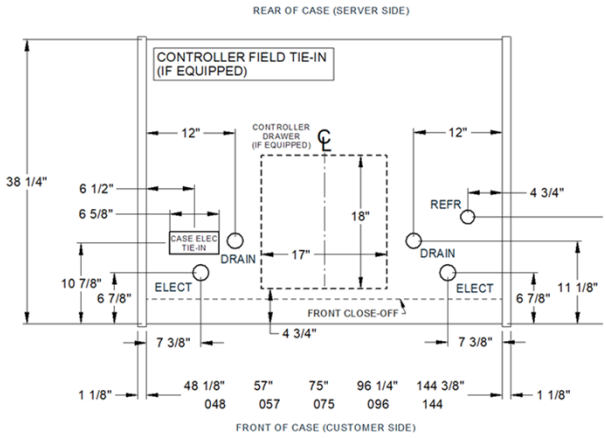

REFRIGERATION DATA:

CASE LENGTHS	CASE USAGE	CAPACITY *** (BTU/HR/FT)		TEMPERATURE (°F)			VELOCITY (FT/MIN)
		RATING CONDITION		EVAPORATOR		DISCHARGE AIR ** (°F)	
		NSF 7	AHRI	NSF 7	AHRI	NSF 7	NSF 7
048, 057, 075, 096, 144	BAKERY	530	530	22	22	27~30	270~350

CASE LENGTH	20°F GLYCOL 6° RISE	
	GPM	PSI
048	0.8	2.3
057	0.9	3.3
075	1.2	1.7
096	1.5	1.7
144	2.3	1.6

****FRONT DISCHARGE AIR MEASURED INSIDE AIR CURTAIN HONEYCOMB**

*****REFRIGERATION NOTES:**

1) BTU'S INCLUDE TWO ROWS OF CANOPY LIGHTS. ADD 10 BTUS/SHELF/FT FOR EACH SHELF (LIGHT)
2) AHRI 1200 RATING POINT FOR ENERGY CONSUMPTION COMPARISON ONLY
3) USE DEW POINT FOR HIGH GLIDE REFRIGERANTS. CARE SHOULD BE TAKEN TO USE THE DEW POINT IN P/T TABLES FOR MEASURING AND ADJUSTING SUPERHEAT. ADJUST EVAPORATOR PRESSURE AS NEEDED TO MAINTAIN THE DISCHARGE AIR TEMPERATURE SHOWN.
4) RATING CONDITION IS NSF TYPE I, 75°F/55% RH

REFRIGERATION DATA CONTINUED:

ELEC. THERMOSTAT / AIR SENSOR SETTINGS			DEFROST TYPE	TIME (MIN)	DEFROST FREQUENCY (#/DAY)	TERM. TEMP (°F) COIL ONLY	DRIP TIME	DEFROST WATER (LBS/DAY/FT)
USAGE	CUT IN (°F)	CUT OUT (°F)						
DELI / BAKERY	26	23	OFF TIME	30	6	45	N/A	0.8

END PANEL WIDTH KEY		
# OF END PNLS	END PNL WIDTH (IN.)	TOTAL ADDED LENGTH (IN.)
1	1.125	1.125
2	1.125	2.25

ELECTRICAL DATA:

STANDARD FANS, HEATERS, LED LIGHTS (115 VOLT)

CASE LENGTH	EVAP					AIRSWEEP FANS			CANOPY LIGHTS LED		OPTIONAL LED SHELF LIGHTS		MAX. LED LOAD (W/ ALL OPTIONS)		ANTI-SWEAT HEATERS	
	# OF EVAP FANS	BLADE DIA. (IN.)	BLADE PITCH	AMPS	WATTS	# OF FANS	AMPS	WATTS	AMPS	WATTS	AMPS	WATTS	AMPS	WATTS	AMPS	WATTS
048	2	6.7	25	0.2	16	1	0.04	5	0.4	41	0.4	41	0.7	82	1.0	120
057	2	6.7	25	0.2	16	1	0.04	5	0.5	54	0.4	41	0.8	95	1.1	123
075	3	6.7	25	0.4	24	2	0.08	9	0.6	71	0.5	61	1.1	132	1.6	180
096	3	6.7	25	0.4	24	2	0.08	9	0.7	81	0.7	82	1.4	164	2.1	240
144	6	6.7	25	0.7	48	3	0.12	14	1.1	122	1.1	124	2.1	246	3.1	360

OPTIONAL HIGH OUTPUT LED LIGHTS (115 VOLT)

CASE LENGTH	CANOPY LIGHTS H.O. LED		OPTIONAL SHELF		MAX. H.O. LED LOAD	
	AMPS	WATTS	AMPS	WATTS	AMPS	WATTS
048	0.4	41	0.5	61	0.9	102
057	0.5	54	0.5	61	1.0	114
075	N/A	N/A	N/A	N/A	N/A	N/A
096	0.7	81	1.1	122	1.8	203
114	0.9	107	1.1	122	2.0	229
144	1.1	122	1.6	183	2.6	305

Optional outlets

CONVENIENCE OUTLETS		
# OUTLET	VOLTS	AMPS
1	115	15
1	115	15
1	115	15
1	115	15
1	115	15
2	115	30

Specifications

BAKERY / CAKE SERVICE / DRY MERCHANDISER REVISION DATE 09/13/22

HUSSMANN - DZC-V/C-D

DOE 2017 Energy Efficiency Compliant

Hussmann refrigerated merchandisers configured for sale for use in the United States meet or surpass the requirements of the DOE 2017 energy efficiency standards.

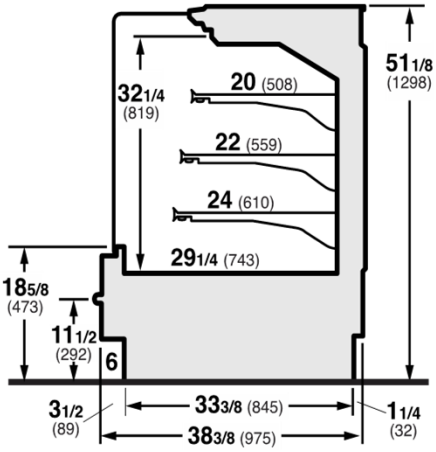

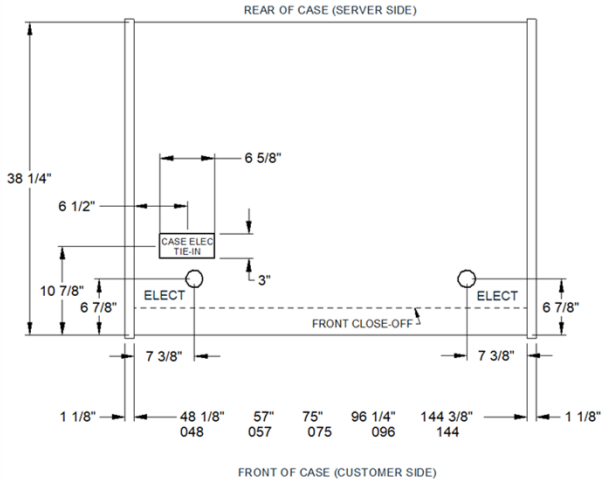

ELECTRICAL DATA:

FANS & LED LIGHTS (115 VOLT)

CASE LENGTH	INTERNAL CIRCULATION FAN				CANOPY LIGHTS LED		OPTIONAL LED SHELF LIGHTS		MAX. LED LOAD (W/ ALL OPTIONS)	
	# OF FANS	FAN SPEC	AMPS	WATTS	AMPS	WATTS	AMPS	WATTS	AMPS	WATTS
048	1	AXIAL FAN	0.04	5	0.4	41	0.4	41	0.7	82
057	1	AXIAL FAN	0.04	5	0.5	54	0.4	41	0.8	95
075	1	AXIAL FAN	0.04	5	0.6	71	0.5	61	1.1	132
096	1	AXIAL FAN	0.04	5	0.7	81	0.7	82	1.4	164
144	1	AXIAL FAN	0.04	5	1.1	122	1.1	124	2.1	246

OPTIONAL HIGH OUTPUT LED LIGHTS (115 VOLT)

CASE LENGTH	CANOPY LIGHTS H.O. LED		OPTIONAL SHELF		MAX. H.O. LED LOAD	
	AMPS	WATTS	AMPS	WATTS	AMPS	WATTS
048	0.4	41	0.5	61	0.9	102
057	0.5	54	0.5	61	1.0	114
075	N/A	N/A	N/A	N/A	N/A	N/A
096	0.7	81	1.1	122	1.8	203
144	1.1	122	1.6	183	2.6	305

Optional outlets

CONVENIENCE OUTLETS		
# OUTLET	VOLTS	AMPS
1	115	15
1	115	15
1	115	15
1	115	15
2	115	30

END PANEL WIDTH KEY		
# OF END PNLS	END PNL WIDTH (IN.)	TOTAL ADDED LENGTH (IN.)
1	1.125	1.125
2	1.125	2.25

Specifications

BAKERY / CAKE SERVICE CASE WITH DRAWER REVISION DATE 09/13/22

HUSSMANN - DZC-V-DWR-R

DOE 2017 Energy Efficiency Compliant

Hussmann refrigerated merchandisers configured for sale for use in the United States meet or surpass the requirements of the DOE 2017 energy efficiency standards.

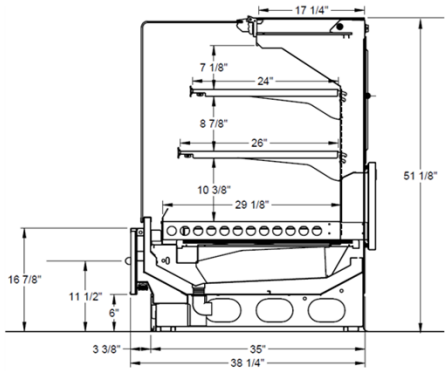

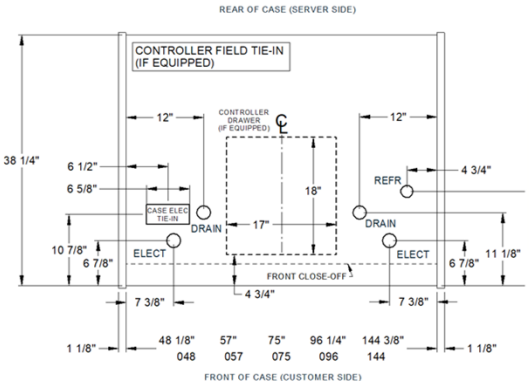

REFRIGERATION DATA:

CASE LENGTHS	CASE USAGE	CAPACITY *** (BTU/HR/FT)		TEMPERATURE (°F)			VELOCITY (FT/MIN)
		RATING CONDITION		EVAPORATOR		DISCHARGE AIR ** (°F)	
		NSF 7	AHRI	NSF 7	AHRI	NSF 7	NSF 7
048, 057, 075, 096, 144	BAKERY	440	440	22	22	25~27	180 - 280

CASE LENGTH	20°F GLYCOL 6° RISE	
	GPM	PSI
048	0.7	1.9
057	0.8	2.7
075	1.0	1.4
096	1.3	1.4
144	1.9	1.3

****FRONT DISCHARGE AIR MEASURED INSIDE AIR CURTAIN HONEYCOMB**

*****REFRIGERATION NOTES:**

1) BTU'S INCLUDE TWO ROWS OF CANOPY LIGHTS. ADD 10 BTUS/SHELF/FT FOR EACH SHELF (LIGHT)
2) AHRI 1200 RATING POINT FOR ENERGY CONSUMPTION COMPARISON ONLY
3) USE DEW POINT FOR HIGH GLIDE REFRIGERANTS. CARE SHOULD BE TAKEN TO USE THE DEW POINT IN P/T TABLES FOR MEASURING AND ADJUSTING SUPERHEAT. ADJUST EVAPORATOR PRESSURE AS NEEDED TO MAINTAIN THE DISCHARGE AIR TEMPERATURE SHOWN.
4) RATING CONDITION IS NSF TYPE I, 75°F/55% RH

REFRIGERATION DATA CONTINUED:

ELEC. THERMOSTAT / AIR SENSOR SETTINGS			DEFROST TYPE	TIME (MIN)	DEFROST FREQUENCY (#/DAY)	TERM. TEMP (°F) COIL ONLY	DRIP TIME	DEFROST WATER (LBS/DAY/FT)
USAGE	CUT IN (°F)	CUT OUT (°F)						
DELI / BAKERY	26	23	OFF TIME	30	6	45	N/A	2.5

END PANEL WIDTH KEY		
# OF END PNLS	END PNL WIDTH (IN.)	TOTAL ADDED LENGTH (IN.)
1	1.125	1.125
2	1.125	2.25

ELECTRICAL DATA:

STANDARD FANS, HEATERS, LED LIGHTS (115 VOLT)

CASE LENGTH	EVAP					AIRSWEEP FANS			CANOPY LIGHTS LED		OPTIONAL LED SHELF LIGHTS		MAX. LED LOAD (W/ ALL OPTIONS)		ANTI-SWEAT HEATERS	
	# OF EVAP FANS	BLADE DIA. (IN.)	BLADE PITCH	AMPS	WATTS	# OF FANS	AMPS	WATTS	AMPS	WATTS	AMPS	WATTS	AMPS	WATTS	AMPS	WATTS
048	2	6.7	25	0.2	16	1	0.04	5	0.4	41	0.4	41	0.7	82	1.0	120
057	2	6.7	20	0.2	16	1	0.04	5	0.5	54	0.4	41	0.8	95	1.1	123
075	3	6.7	25	0.4	24	2	0.08	9	0.6	71	0.5	61	1.1	132	1.6	180
096	3	6.7	25	0.4	24	2	0.08	9	0.7	81	0.7	82	1.4	164	2.1	240
144	6	6.7	25	0.7	48	3	0.12	14	1.1	122	1.1	124	2.1	246	3.1	360

OPTIONAL HIGH OUTPUT LED LIGHTS (115 VOLT)

CASE LENGTH	CANOPY LIGHTS H.O. LED		OPTIONAL SHELF		MAX. H.O. LED LOAD	
	AMPS	WATTS	AMPS	WATTS	AMPS	WATTS
048	0.4	41	0.5	61	0.9	102
057	0.5	54	0.5	61	1.0	114
075	N/A	N/A	N/A	N/A	N/A	N/A
096	0.7	81	1.1	122	1.8	203
114	0.9	107	1.1	122	2.0	229
144	1.1	122	1.6	183	2.6	305

Optional outlets

CONVENIENCE OUTLETS		
# OUTLET	VOLTS	AMPS
1	115	15
1	115	15
1	115	15
1	115	15
1	115	15
2	115	30

Electrical

Merchandiser Electrical Data

Technical data sheets are shipped with this manual. The data sheets provide merchandiser electrical data. Refer to the technical data sheets and merchandiser serial plate for electrical information.

Electrical Connections

All wiring must comply with NEC and local codes. All electrical connections including both supply circuits are to be made in the electrical J-Box.

ALWAYS CHECK THE SERIAL PLATE FOR COMPONENT AMPERES

Field Wiring

Field wiring must be sized for component amperes stamped on the serial plate (refer to page 24 for location). Actual ampere draw may be less than specified.

Identification of Wiring

Leads for all electrical circuits are identified by colored plastic bands. These bands correspond to the color code sticker (shown below) located inside the merchandiser's wireway cover.

WARNING

--LOCK OUT/ TAG OUT--

To avoid serious injury or death from electrical shock, always disconnect the electrical power at the main disconnect when servicing or replacing any electrical component. This includes, but is not limited to, such items as doors, lights, fans, heaters, and thermostats.

STANDARD CASE WIRE COLOR CODE
CODIGO DE COLORES DE LOS ALAMBRES PARA LAS VITRINAS ESTANDAR
CODE COULER POUR FILS DE BOITIER NORMALISE

COLOR DESCRIPTION	DESCRIPCION	DESCRIPTION
GROUND	TIERRA MASA	MASSE
ANTI-SWEAT	ANTICONDENSACION	ANTI-SUINTEMENT
LIGHTS	LUCES	ECLAIRAGE
RECEPTACLES	ENCHUFES	PRISE DE COURANT
T-STAT/SOLENOID 230VAC	TERMOSTATO/SOLENOIDE (230VAC)	SOUPAPE A SOLENOID (230 VAC)
T-STAT/SOLENOID 115VAC	TERMOSTATO/SOLENOIDE (115VAC)	SOUPAPE A SOLENOID (115 VAC)
T-STAT/SOLENOID 24VAC	TERMOSTATO/SOLENOIDE (24VAC)	SOUPAPE A SOLENOID (24 VAC)
FAN MOTORS	VENTILADORES	VENTILATEUR
BLUE CONDENSING UNIT	UNIDAD DE CONDENSACION	UNITE DE CONDENSATION

USE COPPER CONDUCTORS ONLY
UTILISEZ LES CONDUCTEURS DE CUIVRE SEULEMENT
UTILICE LOS CONDUCTORES DE COBRE SOLAMENTE
430-01-0338 R101003

Electrical Component Locations

UPPER REAR EXTERIOR

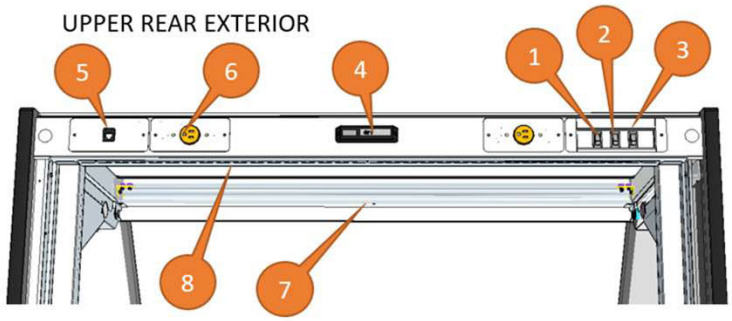

INTERIOR LINER / UNDER DECK PANS

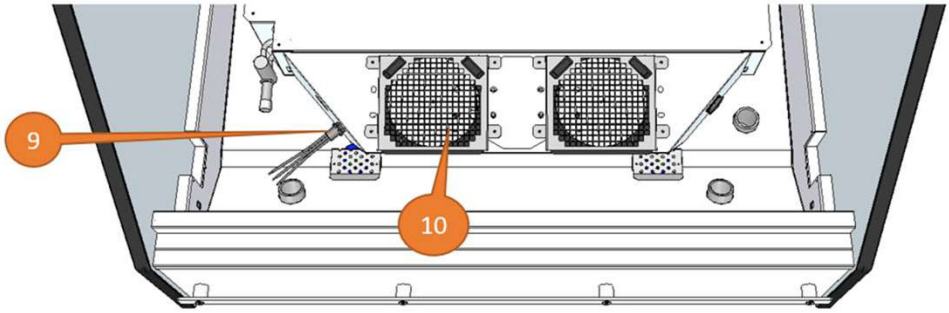

BEHIND FRONT LOWER BODY PANEL

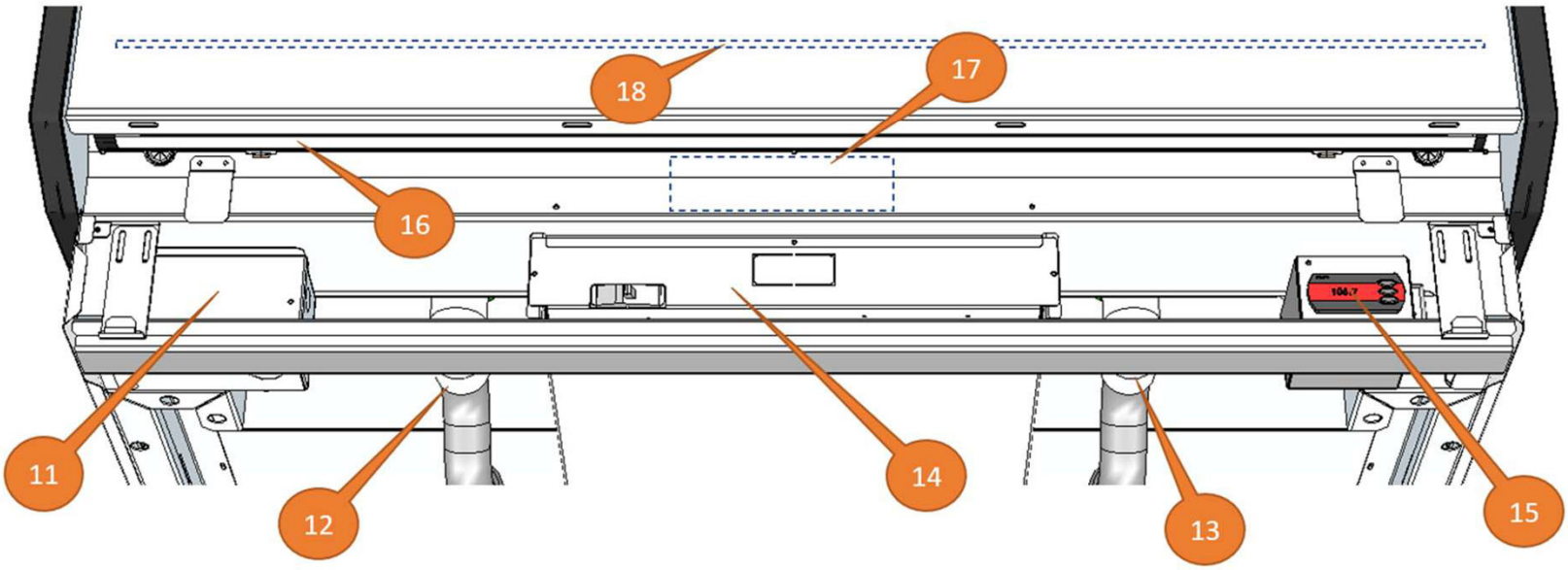

1. Main Light Switch
2. Air-Sweep Heater Switch
3. Ledge Light Switch (If Equipped)
4. Thermometer
5. Data port (If Equipped)
6. Isolated Ground Power Receptacle (If Equipped)
7. Front Canopy Light Fixture
8. Rear Canopy Light Fixture (If Equipped, remove plex deflector)
9. Evaporator Fan Harness Disconnect
10. Evaporator Fan Motor
11. Junction Box / Field Tie-in
12. Left Drain & Trap
13. Right Drain & Trap
14. EEV Controller Box (if Equipped)
15. RCU Controller & Display (If Equipped)
16. Ledge Light Fixture (If Equipped)
17. LED Driver(s) (See LED Driver Access page 28)
18. Air Sweep Heater (Behind Front Body Panel) (See Page 42)

Electrical Component Locations

Access to J-Box / Controller Box / Drains

The merchandisers electrical access is located at the FRONT of the case. Follow the illustrated procedure to access J-Box, Controllers, and Drains

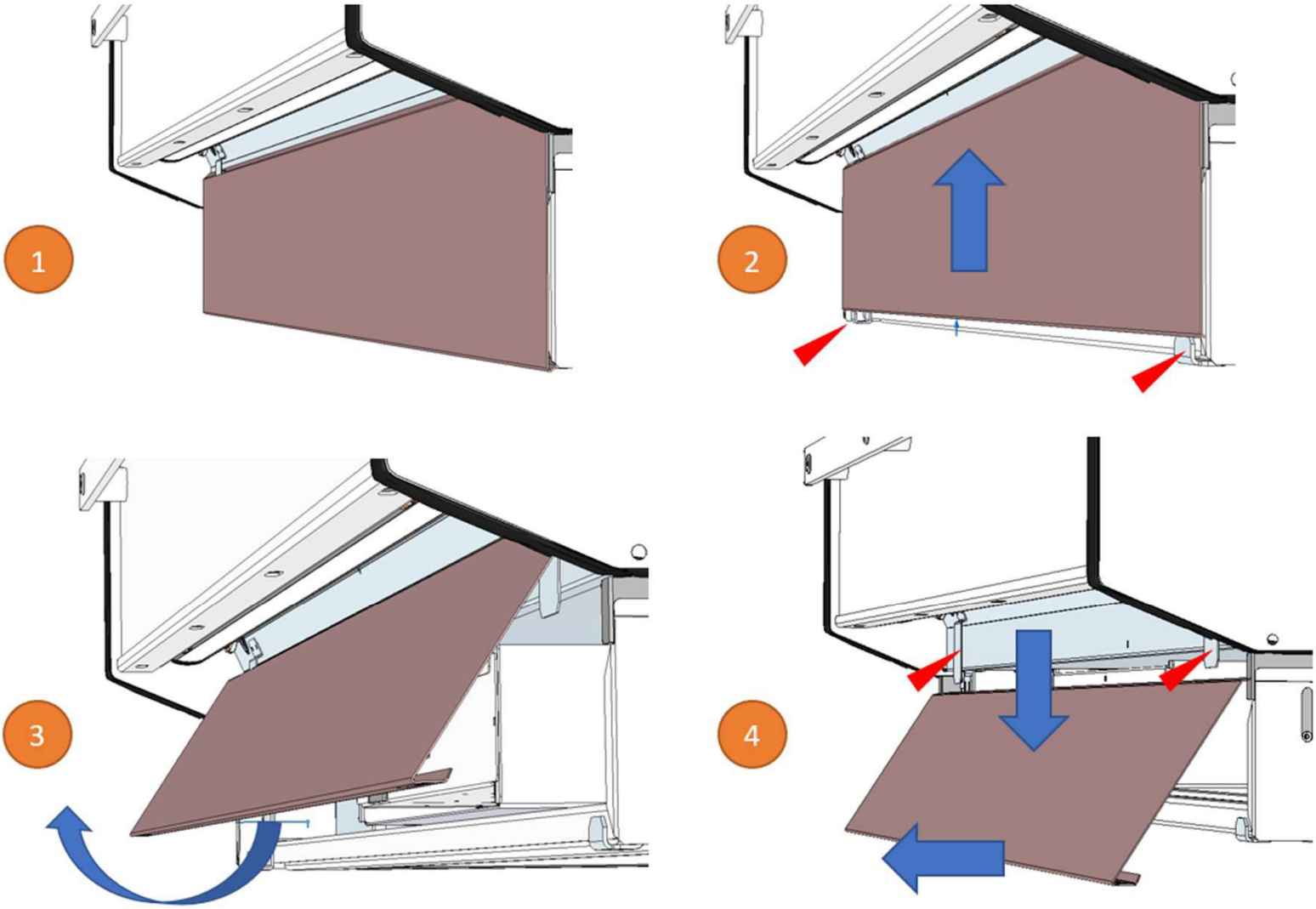

1. A front splashguard or trim may be attached to the body panel. Lift out as one unit.
2. Lift the Lower Front Body Panel straight upwards to clear the lower retention brackets
3. Rotate the Lower Front Body Panel from its bottom edge to sufficiently clear the lower brackets
4. After rotation, Lower the panel until it has been disengaged from the upper retention brackets
5. Move Panel Away from case

Re-assemble by reversing steps 1 - 5

Electrical Component Locations

Access to LED Drivers

The merchandisers LED Drivers are located behind the ledge light fixture location. To access this location, first remove the Lower Front Body Panel (procedure on page 31)

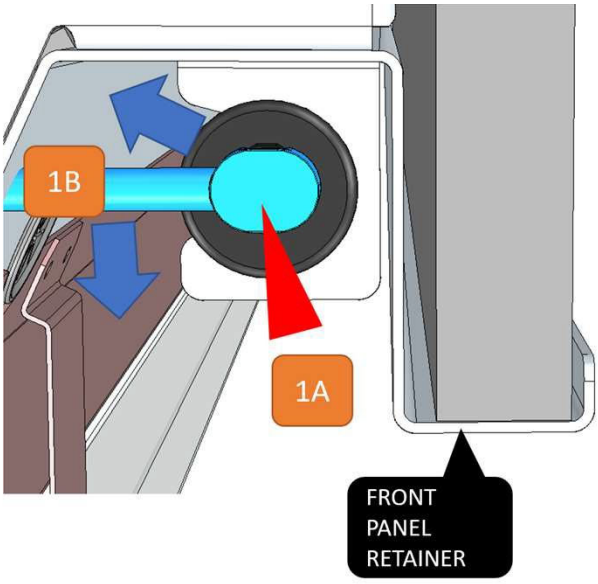

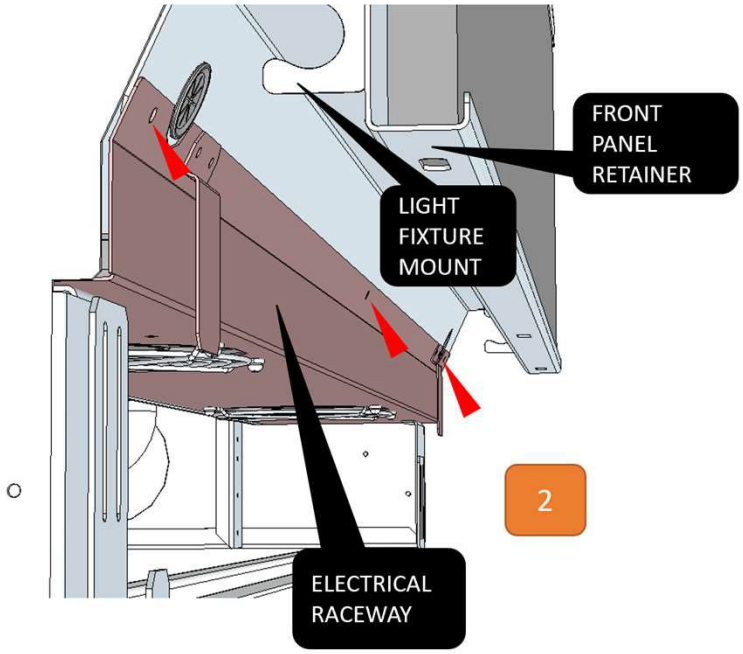

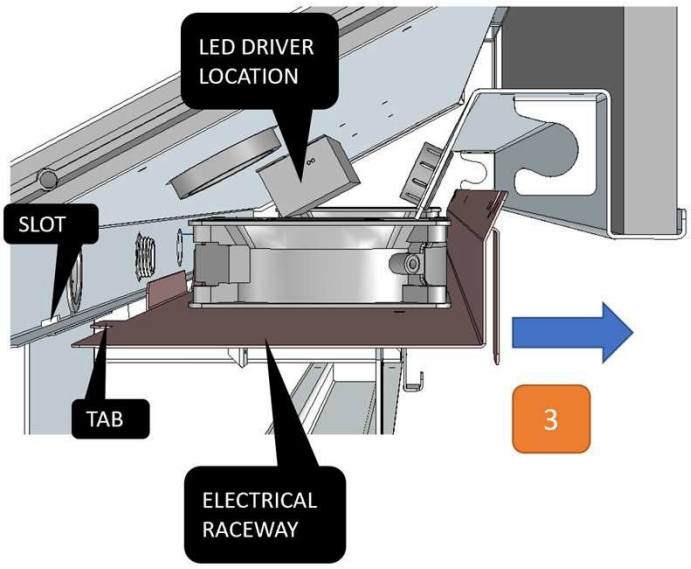

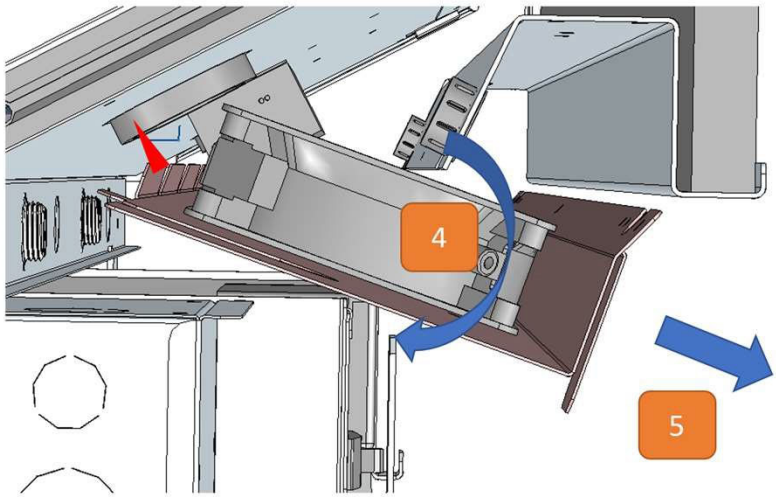

1. (A) Unplug ledge light fixture. (B) Push fixture inward to disengage grommet from mount, then remove downward.
2. Remove Raceway to Body Panel Retainer screws.
3. Pull the raceway assembly forward. Disengage rear tabs are from slots.
4. Rotate the assembly downward to clear the Front Panel Retainer.
5. Gently Pull Assembly away from case.

Note that the Electrical Raceway will have wire harnesses and assemblies that are fastened to it. Use care when removing and reinstalling.

Re-assemble by reversing steps 1 - 5

WARNING

DO NOT WORK ON ENERGIZED PARTS.

DISCONNECT POWER TO THE CASE BEFORE PEFORMING THIS PROCEDURE

CIRCUIT #1
LOADING

L1 120V		
L1 2.3		

REVISION HISTORY						
REV	ECN	DATE	REVISION DESCRIPTION	REV BY	CHKD BY	APPR BY
D	ECN-COD-0016104	8-2-22	3RD ROW LIGHTS OPTIONAL	CB	CB	CB
E	ECN-COD-0018145	7-26-23	CHANGED EVAP FANS	CB	CB	CB

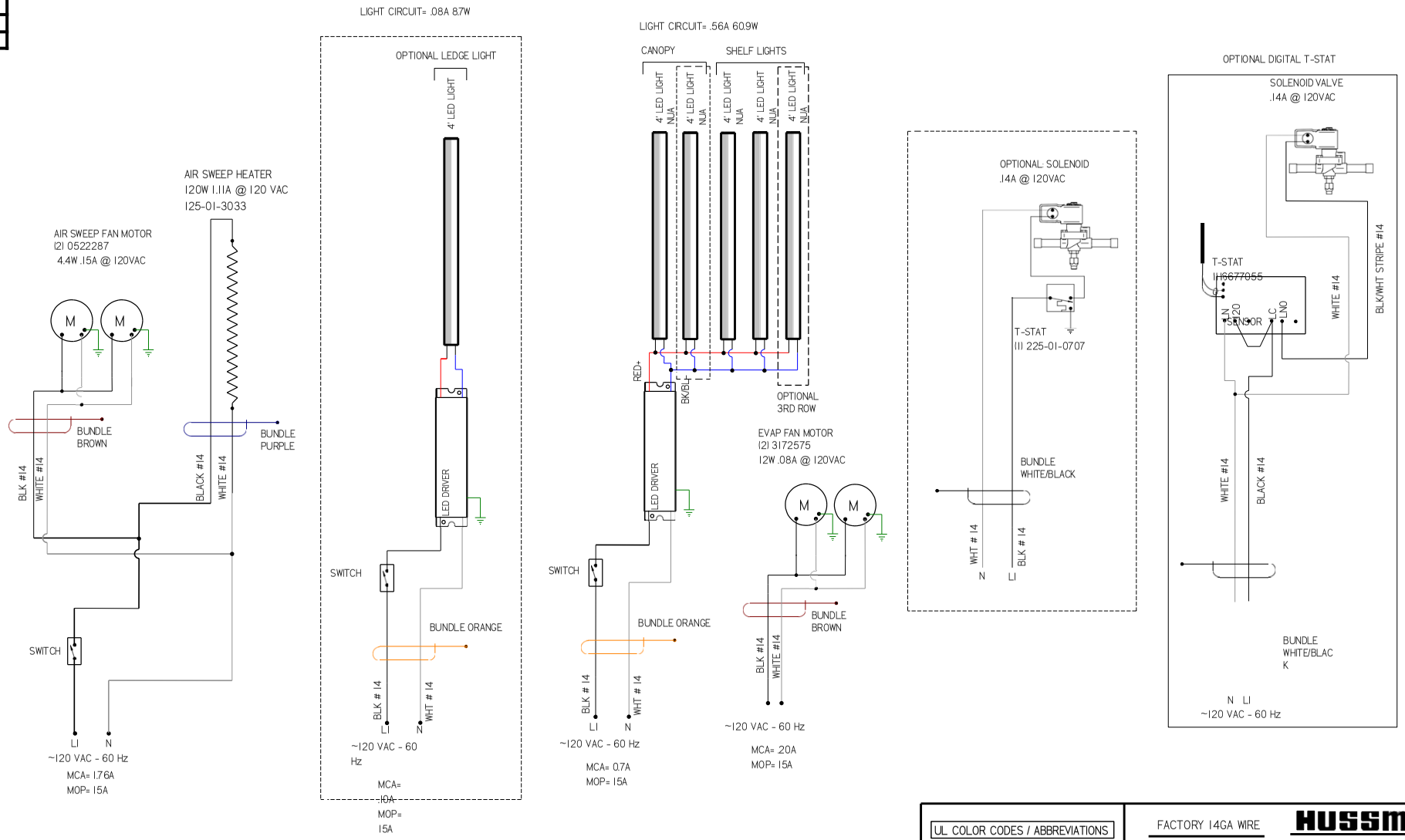

NOTES:
1. PRINTED DOCUMENT REQUIRED SETTING: ALL COLORS BLACK & WHITE
2. CASE & ANY REMOVABLE PANEL WITH ELECTRICAL PARTS MUST BE GROUNDED.
3. WHEN PASSING WIRES THROUGH METAL HOLES A GROMMET MUST BE USED

UL COLOR CODES / ABBREVIATIONS

- RED = RD
- BLACK = BK
- BLUE = BL
- YELLOW =
- YL GRAY = GY
- WHITE = WT
- GREEN = GN
- BROWN = BN
- ORANGE =
- OR VIOLET = VT

FACTORY 14GA WIRE
FACTORY 10GA WIRE
FIELD WIRE

DO NOT SCALE DRAWING
SHEET 1 OF 1

HUSSMANN

DIAGRAM-DZC-V/C-0 48-R

P/N 3103053 REV E

CND_10 WIRE DIAGRAM SIZE C

CIRCUIT #1
LOADING

120V		
LT 22		

REVISION HISTORY						
REV	ECN	DATE	REVISION DESCRIPTION	REV BY	CHKD BY	APPR BY
D	ECN-CAP-0016840	11-1-22	CHANGED A.S. FAN MOTORS	CB	CB	CB
E	ECN-CAP-0018145	7-26-23	CHANGED EVAP FAN MOTORS	CB	CB	CB

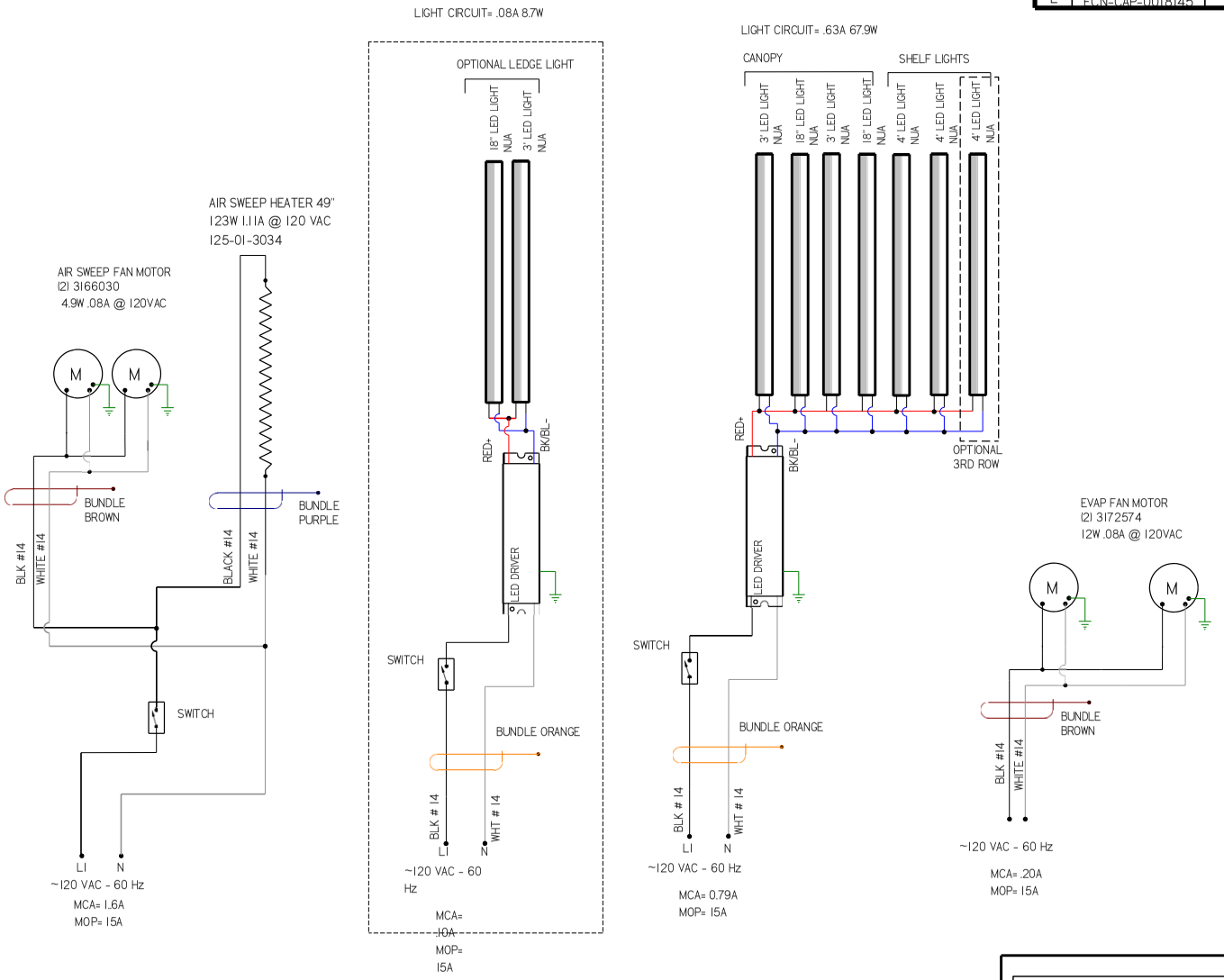

NOTES:
1. PRINTED DOCUMENT REQUIRED SETTING: ALL COLORS BLACK & WHITE
2. CASE & ANY REMOVABLE PANEL WITH ELECTRICAL PARTS MUST BE GROUNDED.
3. WHEN PASSING WIRES THROUGH METAL HOLES A GROMMET MUST BE USED

UL COLOR CODES / ABBREVIATIONS

- RED = RD
- BLACK = BK
- BLUE = BL
- YELLOW =
- YL GRAY = GY
- WHITE = WT
- GREEN = GN
- BROWN = BN
- ORANGE =
- OR VIOLET = VT

FACTORY 14GA WIRE
FACTORY 10GA WIRE
FIELD WIRE

DO NOT SCALE DRAWING
SHEET 1 OF 1

HUSSMANN®
DIAGRAM-DZC-V-057 -R
P/N 3109833 REV E

CND_10 WIRE DIAGRAM SIZE C

REVISION HISTORY						
REV	ECN	DATE	REVISION DESCRIPTION	REV BY	CHKD BY	APPR BY
D	ECN-COD-0016840	11-1-22	CHANGED A.S. FAN MOTORS	CB	CB	CB
E	ECN-COD-0018145	7-26-23	CHANGED EVAP FAN MOTORS	CB	CB	CB

CIRCUIT #1
LOADING

	120V	
LI	3.3	

AIR SWEEP HEATER 67"
180W 1.5A @ 120 VAC
125-01-3032

AIR SWEEP FAN MOTOR
121 3166030
4.9W .08A @ 120VAC

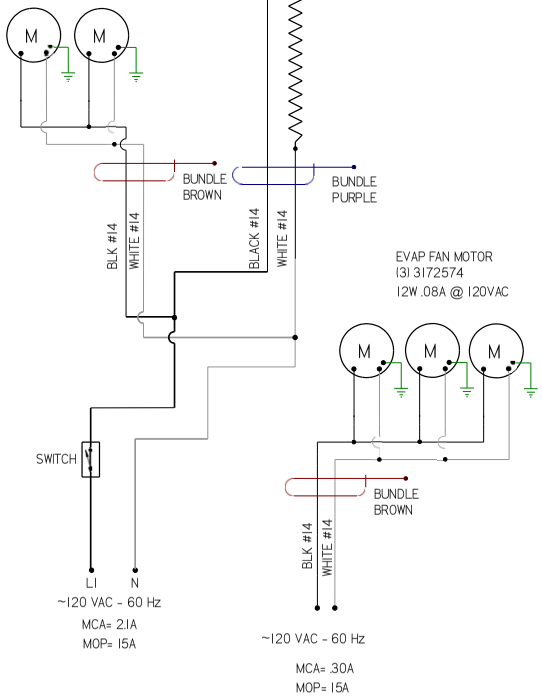

EVAP FAN MOTOR
131 3172574
12W .08A @ 120VAC

LIGHT CIRCUIT= .13A 13.4W

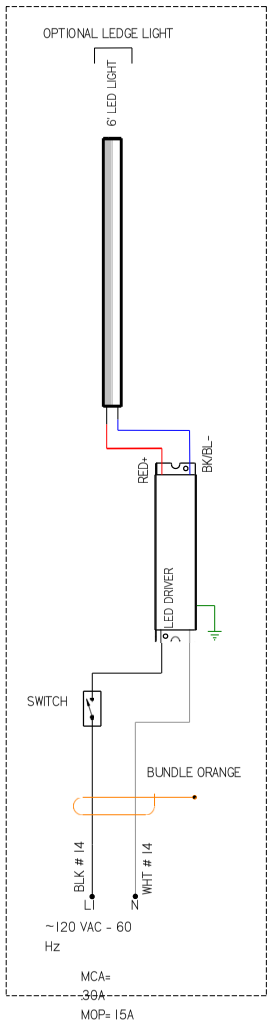

LIGHT CIRCUIT= 0.90A 97.3W

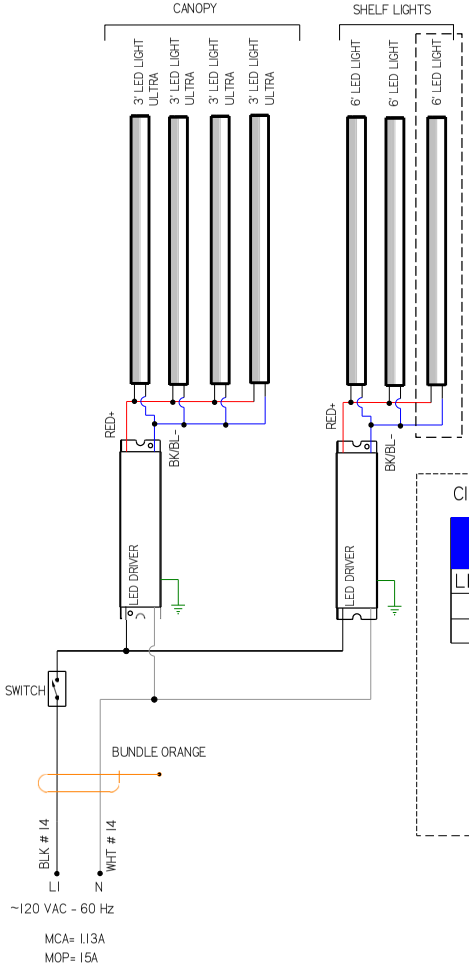

CIRCUIT # 2 (optional)

	LOADING	
	120 V	
LI	45.0	

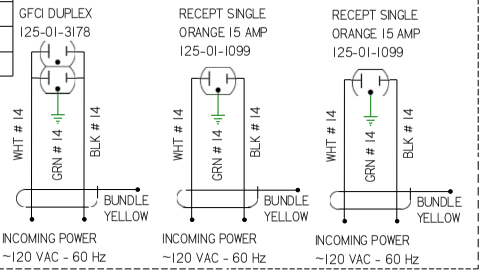

NOTES:
1. PRINTED DOCUMENT REQUIRED SETTING: ALL COLORS BLACK & WHITE
2. CASE & ANY REMOVABLE PANEL WITH ELECTRICAL PARTS MUST BE GROUNDED.
3. WHEN PASSING WIRES THROUGH METAL HOLES A GROMMET MUST BE USED

UL COLOR CODES / ABBREVIATIONS

- RED = RD
- BLACK = BK
- BLUE = BL
- YELLOW =
- YL GRAY = GY
- WHITE = WT
- GREEN = GN
- BROWN = BN
- ORANGE =
- OR VIOLET = VT

FACTORY 14GA WIRE
FACTORY 10GA WIRE
FIELD WIRE

DO NOT SCALE DRAWING
SHEET 1 OF 1

HUSSMANN®
DIAGRAM-DZC-V-075 -R
P/N 3123033 REV E

CND_10 WIRE DIAGRAM SIZE C

REVISION HISTORY						
REV	ECN	DATE	REVISION DESCRIPTION	REV BY	CHKD BY	APPR BY
D	ECN-COD-0016840	11-1-22	CHANGED A.S. FAN MOTORS	CB	CB	CB
E	ECN-COD-0018145	7-26-23	CHANGED EVAP FAN MOTORS	CB	CB	CB

CIRCUIT #1
LOADING

120V	
LI 4.1	

AIR SWEEP HEATER 91"
240W 2.0A @ 120 VAC
125-01-3031

AIR SWEEP FAN MOTOR
(4) 3166030
4.9W .08A @ 120VAC

BUNDLE BROWN
BUNDLE PURPLE
BLK #14
WHITE #14
BLACK #14
WHITE #14
SWITCH
LI
N
~120 VAC - 60 Hz
MCA= 2.9A
MOP= 15A

EVAP FAN MOTOR
(4) 3172574
12W .08A @ 120VAC

BUNDLE BROWN
BLK #14
WHITE #14
~120 VAC - 60 Hz
MCA= .40A
MOP= 15A

LIGHT CIRCUIT= .16A 17.4W

OPTIONAL LEDGE LIGHT
4' LED LIGHT NUA
4' LED LIGHT NUA
RED+
BK/BL-
LED DRIVER
SWITCH
BUNDLE ORANGE
BLK # 14
WHT # 14
LI
N
~120 VAC - 60 Hz
MCA= .20A
MOP= 15A

LIGHT CIRCUIT= 1.13A 121.8W

CANOPY
SHELVES
CANOPY
SHELVES
4' LED LIGHT NUA
RED+
BK/BL-
LED DRIVER
OPTIONAL 3RD ROW
SWITCH
BUNDLE ORANGE
BLK # 14
WHT # 14
LI
N
~120 VAC - 60 Hz
MCA= 1.41A
MOP= 15A

CIRCUIT # 2 (optional)

	LOADING
LI	120 45.0 V

GFCI DUPLEX
125-01-3178
RECEPT SINGLE ORANGE 15 AMP
125-01-1099
RECEPT SINGLE ORANGE 15 AMP
125-01-1099
WHT # 14
GRN # 14
BLK # 14
BUNDLE YELLOW
INCOMING POWER
~120 VAC - 60 Hz

NOTES:
1. PRINTED DOCUMENT REQUIRED SETTING: ALL COLORS BLACK & WHITE
2. CASE & ANY REMOVABLE PANEL WITH ELECTRICAL PARTS MUST BE GROUNDED.
3. WHEN PASSING WIRES THROUGH METAL HOLES A GROMMET MUST BE USED

UL COLOR CODES / ABBREVIATIONS

- RED = RD
- BLACK = BK
- BLUE = BL
- YELLOW =
- YL GRAY = GY
- WHITE = WT
- GREEN = GN
- BROWN = BN
- ORANGE =
- OR VIOLET = VT

FACTORY 14GA WIRE
FACTORY 10GA WIRE
FIELD WIRE

DO NOT SCALE DRAWING
SHEET 1 OF 1

HUSSMANN®
DIAGRAM-DZC-V-096
-R DRAWER OPTION
P/N 3123034 E

CN0_10 WIRE DIAGRAM SIZE C

CIRCUIT #1
LOADING

	120V	
LI	6.5	

REVISION HISTORY						
REV	ECN	DATE	REVISION DESCRIPTION	REV BY	CHKD BY	APPR BY
D	ECN-CAP-0016840	11-1-22	CHANGED A.S. FAN MOTORS	CB	CB	CB
E	ECN-CAP-0018145	7-27-23	CHANGED EVAP FANS & LIGHTS	CB	CB	CB

AIR SWEEP FAN MOTOR
(6) 3166030
4.9W .08A @ 120VAC

AIR SWEEP HEATER 139"
360W 3.0A @ 120 VAC
125-01-3030

BUNDLE BROWN
BUNDLE PURPLE
BLK #14
WHITE #14
BLACK #14
WHITE #14
SWITCH
LI
N
~120 VAC - 60 Hz
MCA= 4.4A
MOP= 15A

EVAP FAN MOTOR
(6) 3172575
12W .16A @ 120VAC

BUNDLE BROWN
BLK #14
WHITE #14
~120 VAC - 60 Hz
MCA= 1.2A
MOP= 15A

LIGHT CIRCUIT= .24A 26.1W

OPTIONAL LEDGE LIGHT
4' LED LIGHT
4' LED LIGHT
4' LED LIGHT
RED+
BK/BL-
LED DRIVER
SWITCH
BUNDLE ORANGE
BLK # 14
WHT # 14
LI
N
~120 VAC - 60 Hz
MCA= 30A
MOP= 15A

LIGHT CIRCUIT= 1.69A 182.7W

CANOPY
SHELF LIGHTS
CANOPY
SHELF LIGHTS
CANOPY
SHELF LIGHTS
4' LED LIGHT NUA
OPTIONAL 3RD ROW
RED+
BK/BL-
LED DRIVER
SWITCH
BUNDLE ORANGE
BLK # 14
WHT # 14
LI
N
~120 VAC - 60 Hz
MCA= 2.11A
MOP= 15A

NOTES:
1. PRINTED DOCUMENT REQUIRED SETTING: ALL COLORS BLACK & WHITE
2. CASE & ANY REMOVABLE PANEL WITH ELECTRICAL PARTS MUST BE GROUNDED.
3. WHEN PASSING WIRES THROUGH METAL HOLES A GROMMET MUST BE USED

UL COLOR CODES / ABBREVIATIONS

- RED = RD
- BLACK = BK
- BLUE = BL
- YELLOW =
- YL GRAY = GY
- WHITE = WT
- GREEN = GN
- BROWN = BN
- ORANGE =
- OR VIOLET = VT

FACTORY 14GA WIRE
FACTORY 10GA WIRE
FIELD WIRE

DO NOT SCALE DRAWING
SHEET 1 OF 1

HUSSMANN

DIAGRAM-DZC-V-144-R

P/N 3109858 REV E

CN0_10 WIRE DIAGRAM SIZE C

CIRCUIT #1
LOAD FOR 048

120V	
L1 0.57	

CIRCUIT #1
LOAD FOR 057

120V	
L1 0.72	

CIRCUIT #1
LOAD FOR 075

120V	
L1 0.83	

CIRCUIT #1
LOAD FOR 096

120V	
L1 1.23	

CIRCUIT #1
LOAD FOR 144

120V	
L1 1.53	

REVISION HISTORY						
REV	ECN	DATE	REVISION DESCRIPTION	REV BY	CHKD BY	APPR BY
C	ECN-COD-0016109	8-26-22	NOTE FOR DRIVERS, ALL SIZES	CB	CB	CB
D	ECN-COD-0016836	10-12-22	CHANGED A.S. FAN MOTOR	CB	CB	CB

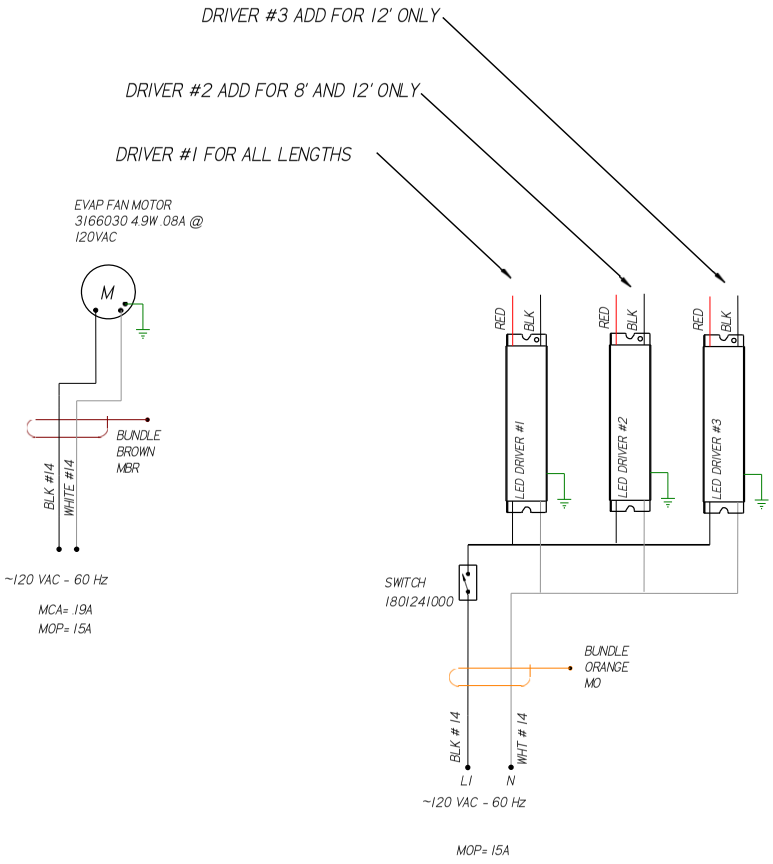

OPTIONAL LEDGE LIGHT ALL LENGTHS

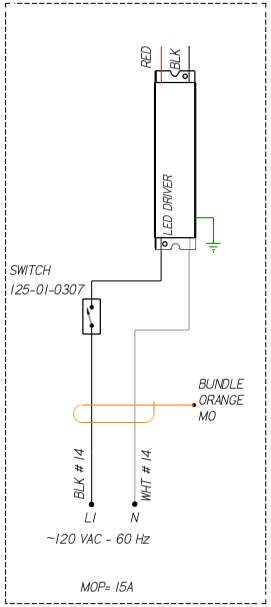

CIRCUIT # 2 OPTIONAL ALL LENGTHS

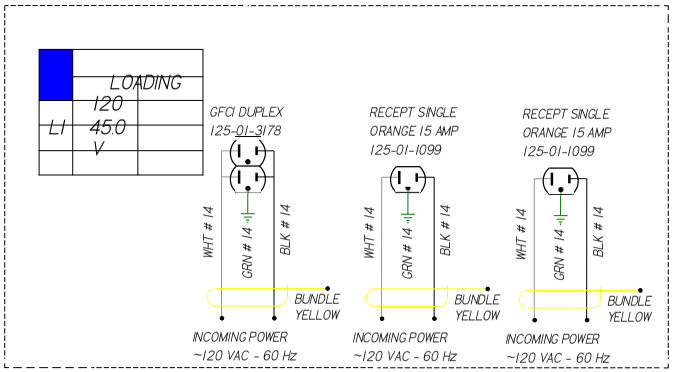

NOTES:
1. PRINTED DOCUMENT REQUIRED SETTING: ALL COLORS BLACK & WHITE
2. CASE & ANY REMOVABLE PANEL WITH ELECTRICAL PARTS MUST BE GROUNDED.
3. WHEN PASSING WIRES THROUGH METAL HOLES A GROMMET MUST BE USED

UL COLOR CODES / ABBREVIATIONS		
RED = RD	WHITE = WT	FACTORY 14GA WIRE
BLACK = BK	GREEN = GN	FACTORY 10GA WIRE
BLUE = BL	BROWN = BN	FIELD WIRE
YELLOW =	ORANGE =	DO NOT SCALE DRAWING
YL GRAY = GY	OR VIOLET = VT	SHEET 1 OF 1

HUSSMANN®

DIAGRAM-DZC-V-048
/057/075/096/144-D

P/N 3127732 REV D

CND_10 WIRE DIAGRAM SIZE C

User Information

Start Up

See the merchandisers Data Sheet Set for refrigerant settings and defrost requirements. Bring merchandisers down to the operating temperatures listed on the Data Sheet.

See page 30 for electrical component locations

WARNING

--LOCK OUT/ TAG OUT--
To avoid serious injury or death from electrical shock, always disconnect the electrical power at the main disconnect when servicing or replacing any electrical component. This includes, but is not limited to, such items as doors, lights, fans, heaters, and thermostats.

Shelf Weight Limits

DZC-V/C merchandiser shelves are designed to support the maximum weight load limits as indicated in the table below.

Exceeding these maximum weight limits may cause damage to shelves, merchandiser, and products, and potentially create a hazardous condition for customers and staff. Exceeding the indicated maximum weight load limits constitutes misuse as described in the Hussmann Limited Warranty.

Weight Limits for DZC Merchandiser Shelving

Nominal Shelf Depth	Maximum Load Limit
12 in. (305 mm)	125 lb (56.7 kg)
14 in. (357 mm)	125 lb (56.7 kg)
16 in. (406 mm)	150 lb (67.9 kg)
18 in. (457 mm)	150 lb (67.9 kg)
20 in. (508 mm)	150 lb (67.9 kg)
22 in. (559 mm)	150 lb (67.9 kg)
24 in. (610 mm)	150 lb (67.9 kg)

*Shelf load limits at 0˚ tilt

Drawer Weight Limits

DZC-V-DWR-R merchandiser drawers are designed to support a maximum weight load limit of 150 lbs.

Do Not use open drawers as a step surface.
Do Not use open drawers as a sitting or resting surface.
Using the drawer features in this manner constitutes misuse as described in the Hussmann Limited Warranty.

Maintenance

Case Cleaning

Long life and satisfactory performance of any equipment are dependent upon the care it receives. To ensure long life, proper sanitation and minimum maintenance costs, the merchandiser should be thoroughly cleaned, all debris removed, and interiors washed down weekly.

WARNING

TO PREVENT INJURY ALWAYS SHUT OFF POWER DURING CLEANING PROCESS.

Exterior Surfaces

The exterior surfaces must be cleaned with a mild detergent without chloride and warm water to protect and maintain their attractive finish. NEVER USE ABRASIVE CLEANSERS OR SCOURING PADS.

Cleaning Bumpers

Clean bumpers with household spray cleaners.

Cleaning Under Merchandiser

Remove lower body panels. Use a vacuum with a long wand attachment to remove accumulated dust and debris from under the merchandiser.

Cleaning Stainless Steel Surfaces

Use non-abrasive cleaning materials, and always polish with the grain of the steel. Use warm water or add a mild detergent to the water and apply with a cloth. Always wipe dry after wetting.

Use non-chlorine containing cleaners such as window cleaners and mild detergents. Do not use cleaners containing salts as this may cause pitting and rusting of the stainless-steel finish. Do not use bleach.

Clean frequently to avoid build-up of hard, stubborn stains. A stainless-steel cleaning solution may be used periodically to minimize scratching and remove stains.

Rinse and wipe dry immediately after cleaning. Never use hydrochloric acid (muriatic acid) on stainless steel.

Interior Surfaces

The interior surfaces may be cleaned with most domestic detergents, ammonia-based cleaners and sanitizing solutions that do not contain chloride with no harm to the surface.

Cleaning Coils

NEVER USE SHARP OBJECTS AROUND COILS. Use a soft brush or vacuum brush to clean debris from coils. Do not puncture Coils! Do not bend fins. Contact an authorized service technician if a coil is punctured, cracked, or otherwise damaged.

ICE in or on the coil indicates the refrigeration and defrost cycle is not operating properly. Contact an authorized Service Technician to determine the cause of icing and to make proper adjustments as necessary. To maintain product integrity, move all product to a cooler until the merchandiser has returned to normal operating temperatures.

Do Not Use:

- Abrasive cleaners and scouring pads, as these will damage the finish.
- A hose on lighted shelves or submerge lighted shelves in water.
- Solvent, oil or acidic based cleaners on any interior surfaces.
- A hose on LED Lights or any other electrical component.

Maintenance - Tips

Do:

- Remove the product and all loose debris to avoid clogging the waste outlet.
- Store product in a refrigerated area such as a cooler during the cleaning process.
- Remove only as much product as can be taken to the cooler in a timely manner.
- **First, turn off refrigeration, then disconnect electrical power to merchandiser.**
- Thoroughly clean all surfaces with soap and hot water.
- Do not use steam or high-pressure water hoses to wash the interior.
- These techniques will damage sealing causing leaks and poor performance.
- Avoid direct contact between fan motors and cleaning or rinse water.
- Rinse with hot water, but DO NOT flood.
- Never introduce water faster than the waste outlet can drain.
- Allow merchandiser to completely dry before resuming operation.
- LED lights are magnetized to each shelf and can be removed easily for any shelf cleaning.
- After cleaning has been completed, remember to restore refrigeration and power back to merchandiser.

Maintenance – Heater Service / Air-sweep Cleaning

Air-sweep Heater Service and Cleaning

Crumbs and debris may fall through the airs-weep discharge slots on service cases. To access this location, remove the Upper Body Panel using the following procedure.

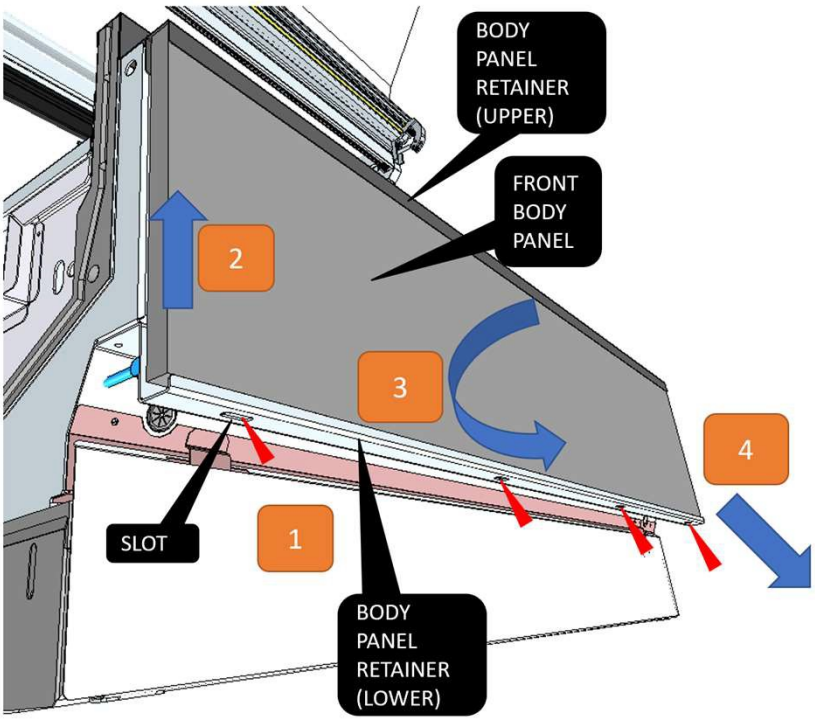

WARNING

DO NOT WORK ON ENERGIZED PARTS.

DISCONNECT POWER TO THE CASE AND ALLOW THE AIRSWEEP HEATER TO COOL BEFORE PEFORMING THIS PROCEDURE

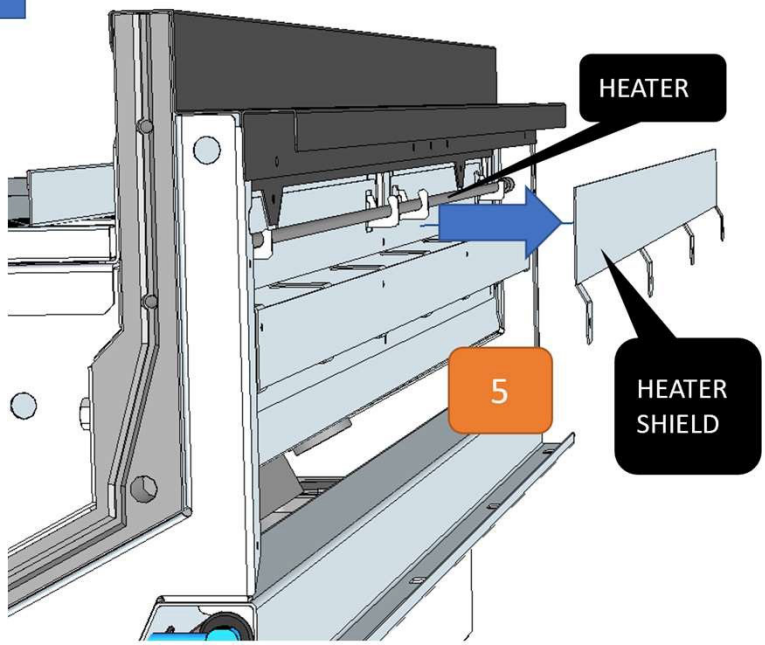

1. Use a flat-bladed screwdriver or blunt prying tool in the indicated slot locations to push the front body panel upward
2. Raise the body panel to its highest position in the upper retainer. Note this step may required an assistant.
3. Rotate the lower edge of the body panel forward to clear the lower retainer
4. Pull the panel downward and away from the case
5. If necessary, remove the heater shield.
6. Clean area with a damp cloth

Re-assemble by reversing steps 1 - 5

Maintenance – Lift Hardware Gas Spring Servicing

IMPORTANT

-LIFT HARDWARE GAS SPRINGS ARE WEAR ITEMS AND WILL DEGRADE OVER TIME

-LONGEVITY OF SERVICE DEPENDS ON MULTIPLE FACTORS, INCLUDING DAILY OPENINGS AND ENVIRONMENTAL CONDITIONS

-GAS SPRINGS REQUIRE MONTHLY INSPECTION

-IF INSPECTION DISCOVERS A DETERIORATED CONDITION, THE GAS SPRINGS MUST BE REPLACED

-SEE PAGES 43-44 OF THIS MANUAL FOR THE GAS SPRING REPLACEMENT PROCEDURE. CONTACT HUSSMANN PERFORMANCE PARTS FOR GAS SPRING REPLACEMENTS.

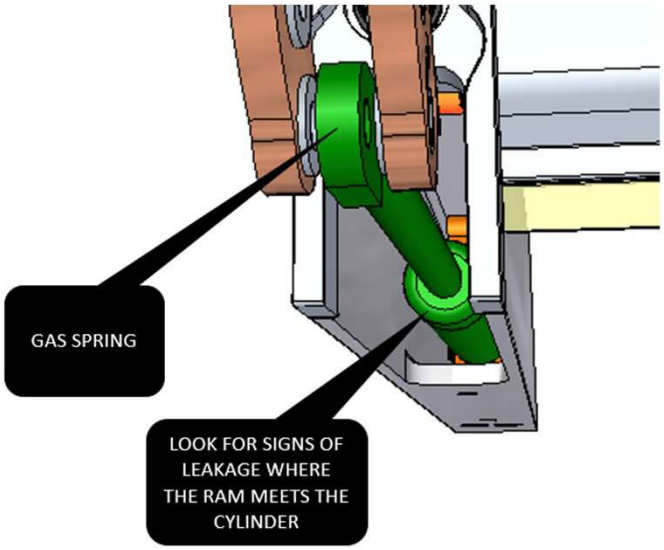

Inspect Gas Springs Visually

1. Raise the front glass to its maximum opening.
2. Using a flashlight, check into the gas spring channel.

Check for signs of abnormal wear, such as fluid leakage from the gas spring body. If leakage is apparent, replace the gas springs.

Inspect Gas Spring Physical Function

1. Raise the front glass to its maximum opening.

Check that the glass does not begin downward travel on its own. If it does, replace the gas spring

2. Close the front glass, then raise it to approximately 33% of its arc swing. Release it.

Check that the glass does not slam down to its resting position. If it does, replace the gas spring

3. Raise the front glass to about its midpoint of travel. Release it.

Check that the front glass maintains its position and does not start to descend. If it does, replace the gas spring

Maintenance – Lift Hardware Gas Spring Replacement- Part 1

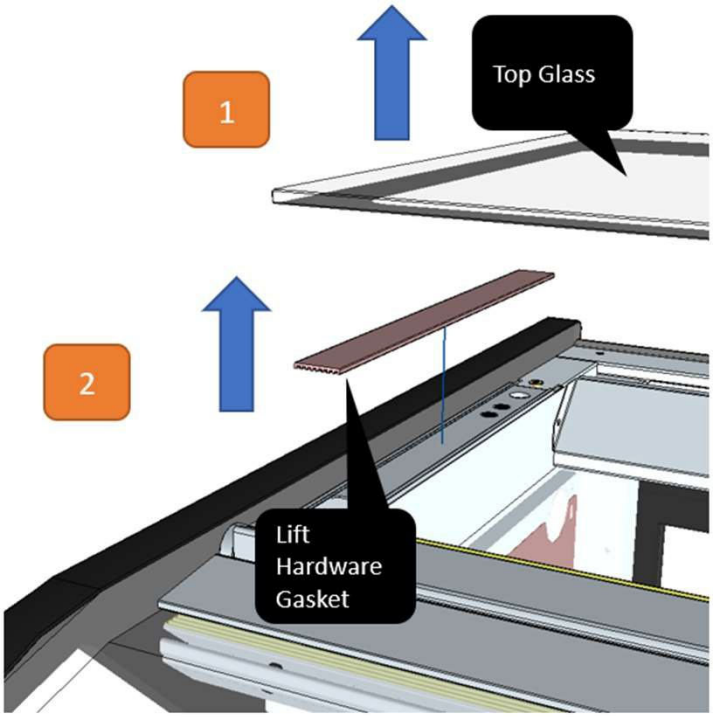

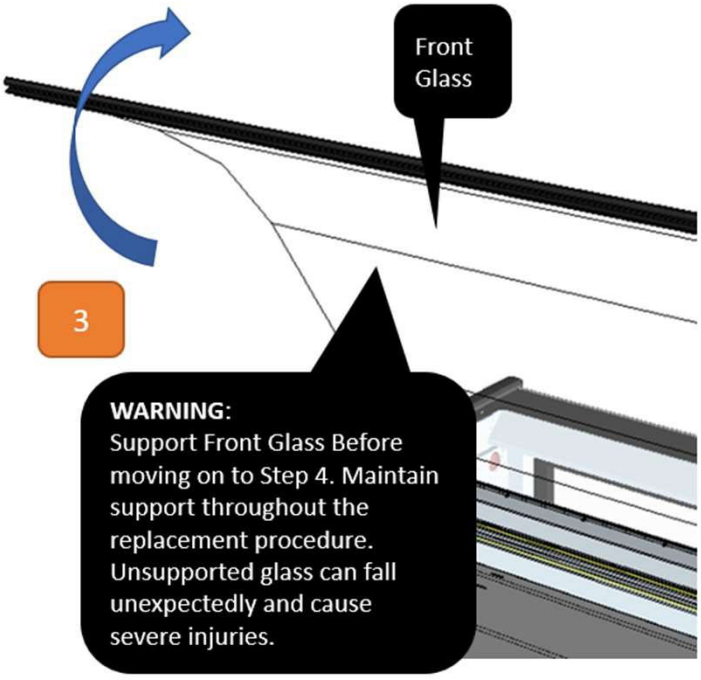

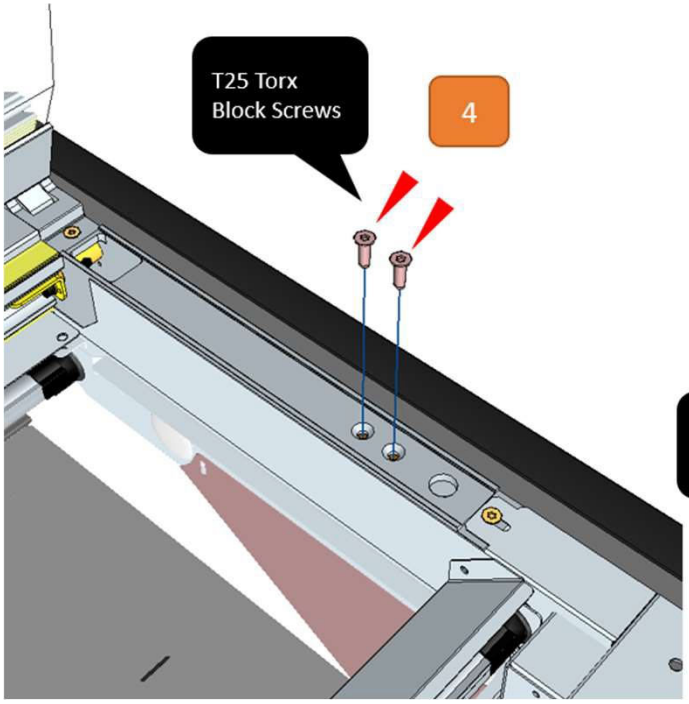

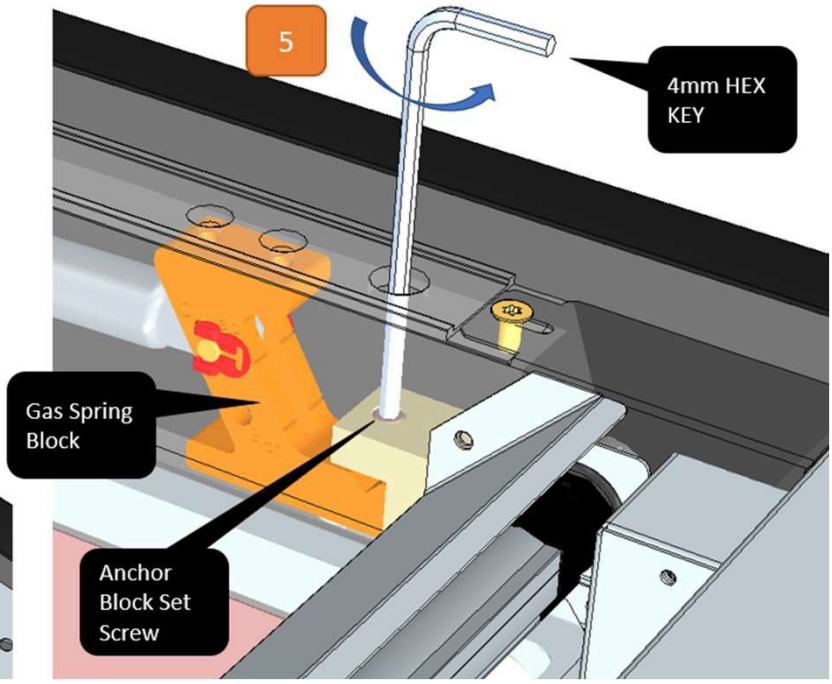

1. Remove the Top Glass and set aside.
2. Remove the Lift Hardware Gasket on the arm of the gas spring that will be replaced.
3. Raise the Front Glass to its maximum opening and support.

The Front Glass must be supported in this position during the entire replacement procedure. Ensure that the support is rigid and is not disturbed during the replacement.

4. Remove the (2) T25 Torx Block Screws towards the rear of the lift arm assembly
5. Loosen the Anchor Block Set Screw. It is not necessary or recommended to remove this screw. Loosen about 4-5 full revolutions in order to disengage the Gas Spring Block

Maintenance – Lift Hardware Gas Spring Replacement- Part 2

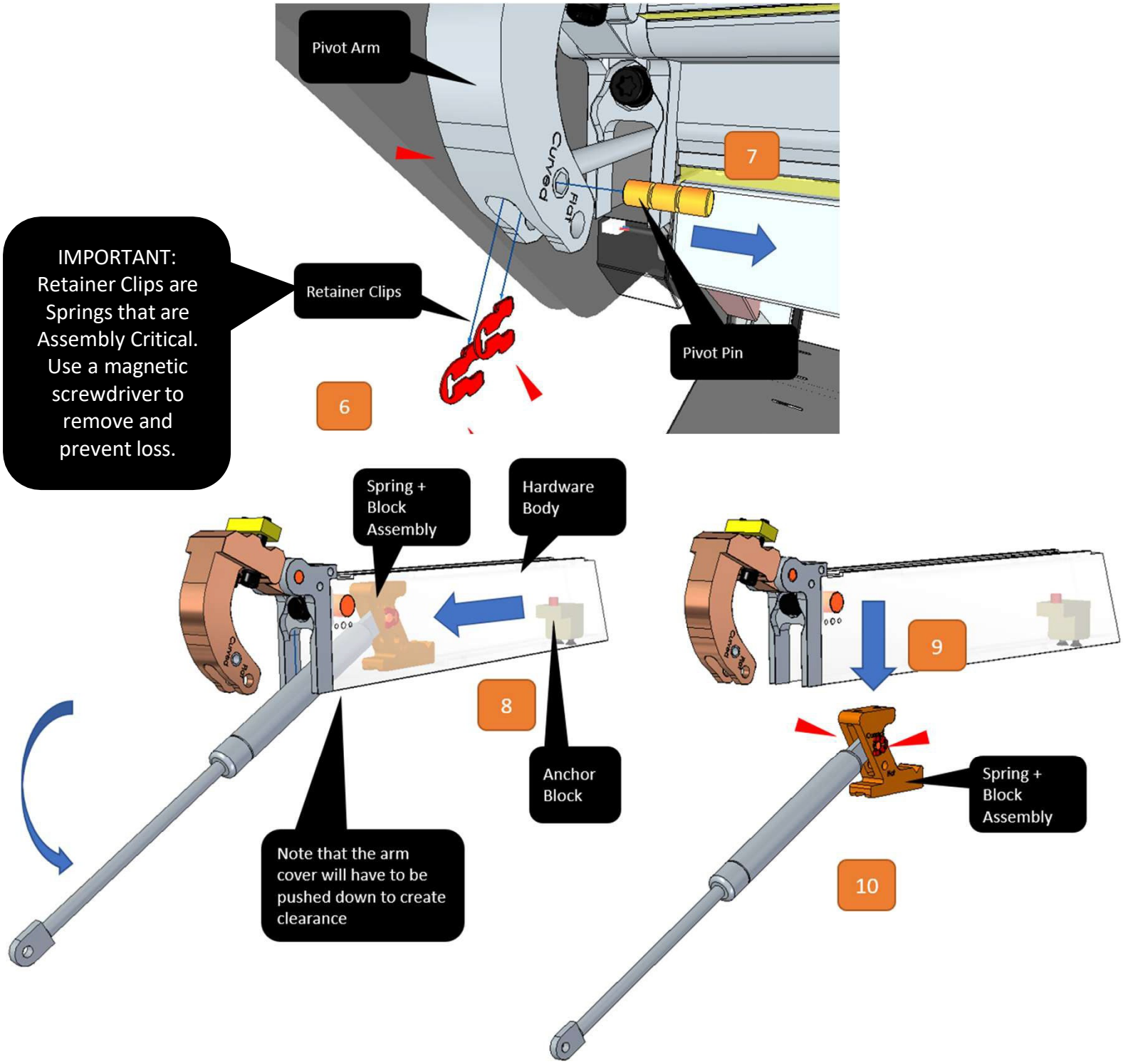

6. Use a magnetic flat-head screwdriver to pull the Retainer Clips from the Pivot Pin, inside the Pivot Arm.
7. Slide the Pivot Pin from its bushings to release the Gas Spring to Pivot Arm Connection.
8. Rotate the Gas Spring down and away from the pivot arm, then Pull toward the front of the case. Note that the arm cover will have to be pushed down to create clearance.
9. Lower the Gas Spring + Spring Block Assembly from the opening in the underside of the Hardware Body.
10. Remove the Spring Clips and Pin from the Spring Block Assembly.

Replace the Gas Spring with one of Equal Strength. Reverse procedure order to re-assemble. Ensure that the Anchor Block Set Screw and Torx Block Screws are well-tightened.

Troubleshooting

Problem	Possible Cause	Possible Solution
Case temperature is too warm.	Ambient conditions may be affecting the case operation	Check case position in store. Is the case located near an open door, window, electric fan or air conditioning vent that may cause air currents? Case must be located minimum 15 Ft away from doors or windows. Cases are designed to operate at 55% Relative humidity and a temperature of 75˚F.
	Discharge air temp is out of spec	Check evaporator fan operation. Check electrical connections and input voltage.
		Fans are installed backwards. Check airflow direction.
		Fan blades are installed incorrectly. Make sure fan blades have correct pitch and are per specification.
		Check to see that fan plenum is installed correctly. It should not have any gaps.
		Check suction pressure and ensure that it meets factory specifications.
	Case is in defrost.	Check defrost settings. See Technical Specifications section.
	Product is blocking airflow	Redistribute product so it does not obstruct airflow to each shelf level. Check to rear deck location to ensure product is not encroaching on the discharge air grill.
	Coil is freezing over	Return air is blocked, make sure debris is not blocking the intake section.
		Coil close-offs are not installed. Inspect coil to make sure these parts are on the case.
	Condensing coil or evaporator coil is clogged or dirty	Clean coil.
	Drawer is not properly closed or sealed	Check that the drawer seal is making good contact after every closure. Ensure that drawer operation is prompt and that sealed is verified after each closure.
Case temperature is too cold.	The t-stat temp is set too low	Check settings. See Technical Specifications section.
	Ambient conditions may be affecting the case operation	Check case position in store. Is the case located near an open door, window, electric fan or air conditioning vent that may cause air currents? Case must be located minimum 15 Ft away from doors or windows. Cases are designed to operate at 55% Relative humidity and a temperature of 75˚F.
Condensation on glass.	Ambient conditions may be affecting the case operation.	Check case position in store. Is the case located near an open door, window, electric fan or air conditioning vent that may cause air currents? Case must be located minimum 15 Ft away from doors or windows. Cases are designed to operate at 55% Relative humidity and a temperature of 75˚F.
	Inadequate air circulation.	Check if air sweep fans are functioning, check electrical connections.
	There is not enough heat provided in the airflow.	Check if air sweep heater is functioning, check electrical connections.
	There are glass gaps on the side of the case.	See glass adjustment section.
	Glass is not completely shut.	Close glass correctly.

Troubleshooting Cont'd

Problem	Possible Cause	Possible Solution
Water has pooled under case.	Case drain is clogged.	Clear drain.
	PVC drains under case may have a leak.	Repair as needed.
	Case tub has unsealed opening.	Seal as needed.
	If the case is in a line-up, case to case joint is missing or unsealed.	Install case to case joint and seal as needed.
	Evaporator pan is overflowing (if applicable).	Check electrical connection to evaporator pan. Check float assembly, it should move freely up and down the support stem. Clear any debris.
Case is not draining properly.	Case is not level.	Level the case.
	Drain screen is plugged.	Clean drain screen and remove any debris.
	Drain or P-trap is clogged.	Clear any debris.
Frost or ice on evaporator coil.	Evaporator fans are not functioning.	Check electrical connections.
	Defrost clock is not functioning.	Case should be serviced by a qualified service technician.
	Coil is freezing over.	Return air is blocked, make sure debris is not blocking the intake section.
		Coil close-offs are not installed. Inspect coil to make sure these parts are on the case.
Lights do not come on.	LED Driver / light socket wiring.	Check electrical connections. See Electrical Section and check wiring diagram.
	LED Driver needs to be replaced.	Case should be serviced by a qualified service technician. See Electrical Section.
	LED fixture socket / connection needs to be replaced.	Case should be serviced by a qualified service technician.
	LED Fixture needs to be replaced.	See Maintenance Section.
	Light Switch needs to replaced.	Case should be serviced by a qualified service technician.

Parts Diagram

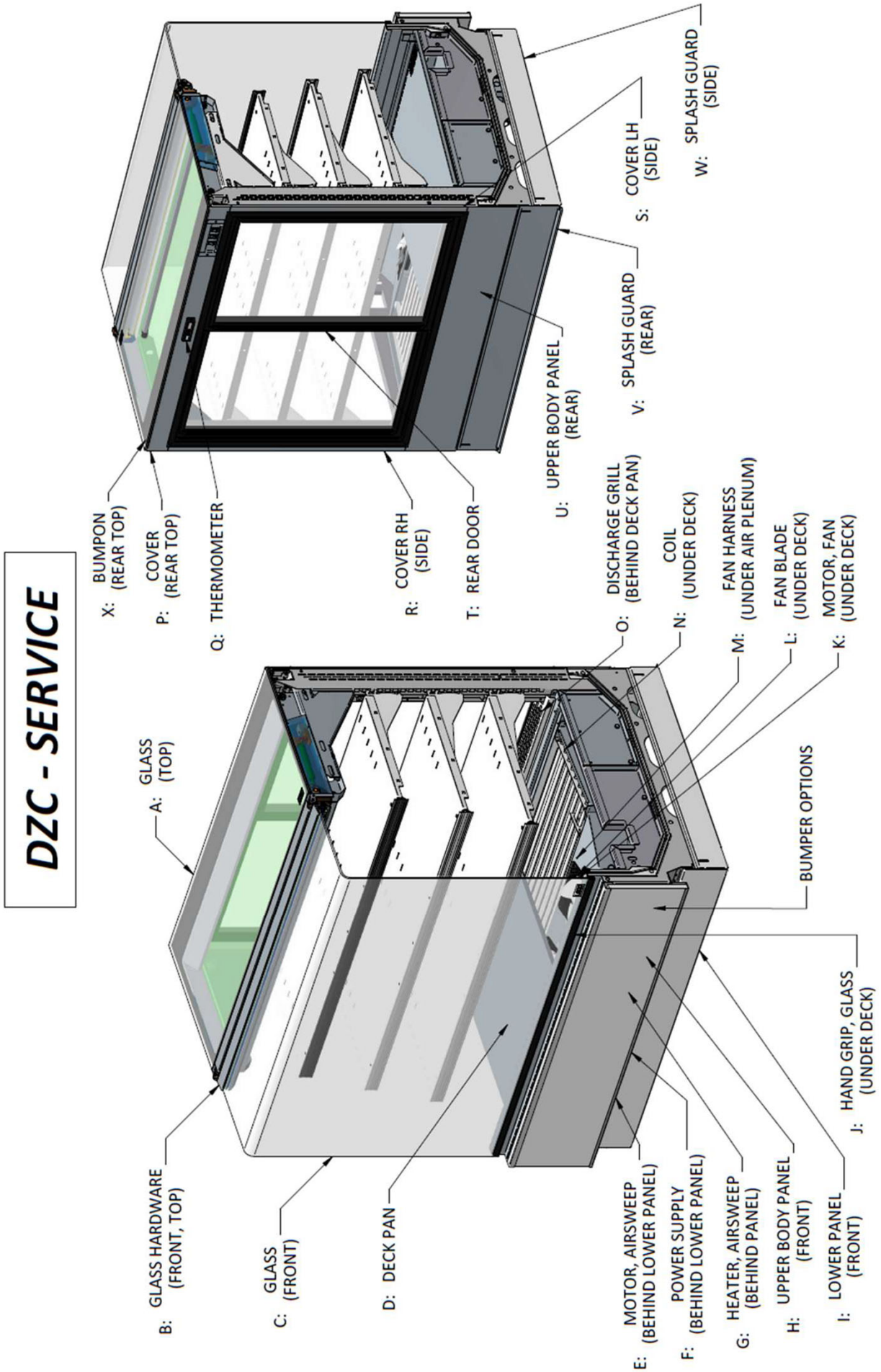

Parts Diagram

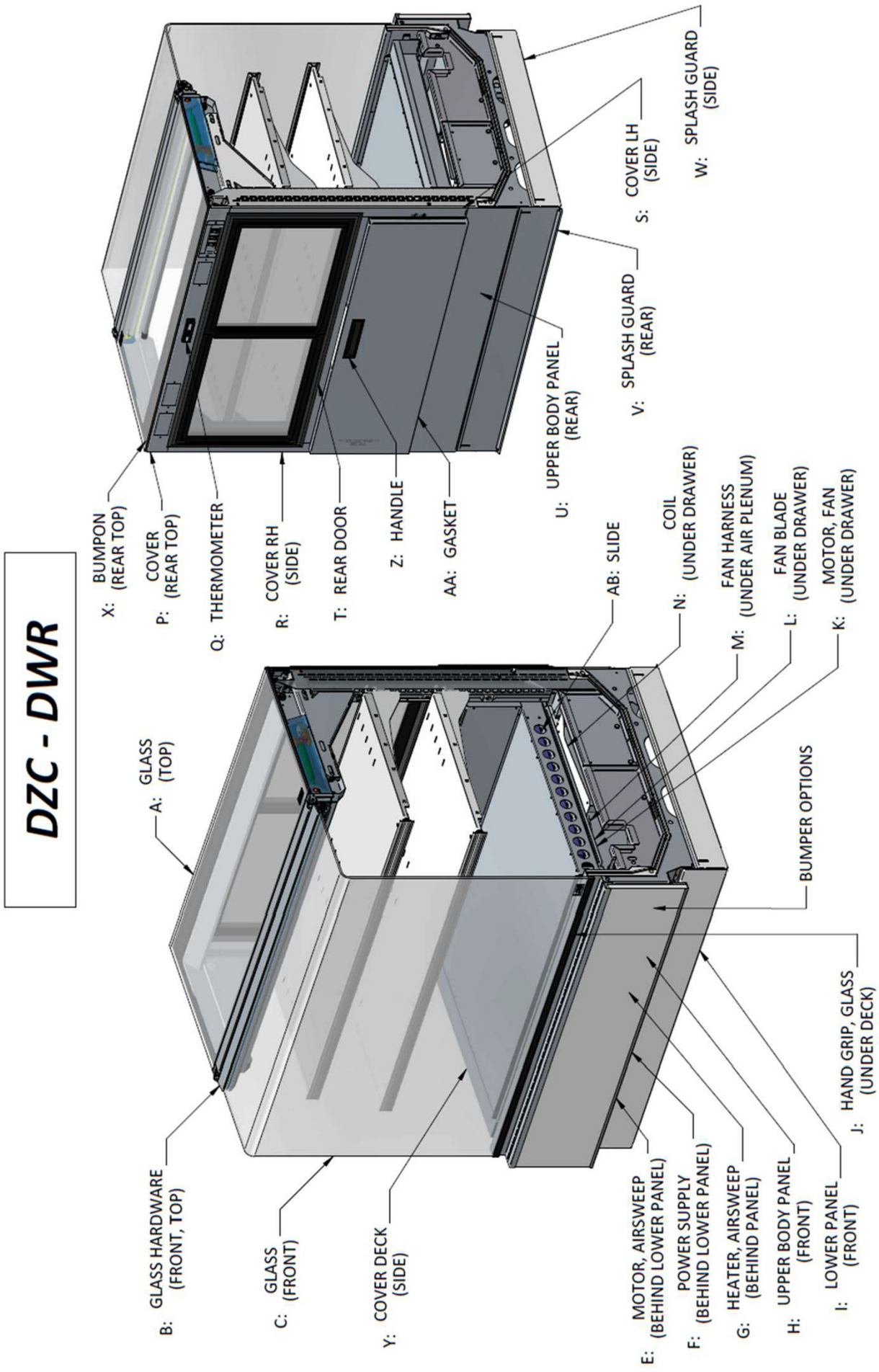

		DZC-048-R		DZC-057-R		DZC-075-R		DZC-096-R		DZC-144-R	
Dwg Ref	Part	Part #	Qty	Part #	Qty	Part #	Qty	Part #	Qty	Part #	Qty
A	Glass - Top of Case	3099410150	1	3102276150	1	3117584150	1	3099410150	2	3099410150	3
B	Glass Hardware - Verical Glass (BLACK)	3125867	1	3125868	1	3125869	1	3125867	2	3125867	3
	Glass Hardware - Double Curve Glass (BLACK)										
	Glass Hardware - Verical Glass (SILVER)	3125882	1	3125883	1	3125884	1	3125882	2	3125882	3
	Glass Hardware - Double Curve Glass (SILVER)										
	Glass Hardware - Straight Glass (BLACK)	3125870	1	3125871	1	3125872	1	3125870	2	3125870	3
	Glass Hardware - Straight Glass (SILVER)	3125885	1	3125886	1	3125887	1	3125885	2	3125885	3
C	Glass - Front of Case - Vertical Glass	3102456150	1	3102457150	1	3102459150	1	3102456150	2	3102456150	3
	Glass - Front of Case - Double Curve Glass	3102464150	1	3102465150	1	3102467150	1	3102464150	2	3102464150	3
	Glass - Front of Case - Straight Glass	3102472150	1	3102473150	1	3102474150	1	3102472150	2	3102472150	3
E	Fan Motor - Airsweep 4.7"x4.7" Boxed	0522287EF	2	0522287EF	2	0522287EF	2	0522287EF	4	0522287EF	6
F	Power Supply - 100W 24VDC	3117868	2	3117868	2	3117868	2	3117868	3	3117868	3
G	Heater(s) - Airsweep	125-02-3033	1	125-02-3034	1	125-02-3032	1	125-01-3031	1	125-01-3030	1
J	Hand/Grip Rail - Black Extrustion for Front Glass	0459613	1	0459614	1	00001024	1	0459613	2	0459613	3
K	Fan Motor - Evaporator	0477653	2	0477653	2	0477653	3	0477653	4	0477653	6
L	Fan Blade for Evaporator Motor	0409512	2	0409512	2	0409512	3	0409512	4	0409512	6
M	Fan Harness for Evaporator Motor	0443521A	1	0443521A	1	0443521A	2	0443521A	2	0443521A	3
N	Evaporator Coil	0500343	1	0500343	1	0500337	1	0500335	1	0500333	1
Q	Thermometer, Digital 25SD 90" Wire	3033723500	1	3033723500	1	3033723500	1	3033723500	1	3033723500	1
T	Door Assembly - Clear Glass	2H01753150	1	3116853450	1	3116859450	1	2H01753150	2	2H01753150	3
	Door Assembly - Mirrored Glass	2H01753150	1	3116850450	1	3116856450	1	2H01753150	2	2H01753150	3
	Door - Rear Inside Sliding Clear Glass	2H01751150	1	3116854450	1	3116860450	1	2H01751150	2	2H01751150	3
	Door - Rear Outside Sliding Clear Glass	2H01752150	1	3116855450	1	3116861450	1	2H01752150	2	2H01752150	3
	Door - Rear Inside Sliding Mirrored	2H01754150	1	3116851450	1	3116857450	1	2H01754150	2	2H01754150	3
	Door - Rear Outside Sliding Mirrored	2H01755150	1	3116852450	1	3116858450	1	2H01755150	2	2H01755150	3
X	Bumpon - Rear Top (Glass Support)	2H13602	3	2H13602	3	2H13602	4	2H13602	5	2H13602	9

THE REPLACEMENT PARTS BELOW REQUIRE A PAINT CODE. IF YOU NEED THE CASE PAINT CODE, PLEASE CONTACT YOUR HUSSMANN REPRESENTATIVE WITH THE CASE MODEL AND SERIAL NUMBER. COMMON PAINT CODES ARE: 700 = WHITE / 701 = SHADOW BLACK.

D	Deck Pan	3098725	2	3102255	2	3119285	3	3098725	4	3098725	6
H	Upper Body Panel - Front	KIT1	1	KIT2	1	KIT3	1	KIT4	1	KIT6	1
I	Lower Panel - Front	3099408	1	3102253	1	3119279	1	3098781	1	3101982	1
O	Discharge Grill - Rear	3091259	1	3102254	1	3119283	1	3091259	2	3091259	3
P	Cover - Top Rear	3099407	1	3102238	1	3119153	1	3091231	1	3101968	1
R	Cover Right - Side Rear	3098743	1	3098743	1	3098743	1	3098743	1	3098743	1
S	Cover Left - Side Rear	3098744	1	3098744	1	3098744	1	3098744	1	3098744	1
U	Upper Body Panel - Rear	3099392	1	3102246	1	3119286	1	3098728	1	3101975	1
V	Splash Guard - Rear	3099409	1	3102248	1	3119287	1	3098782	1	3101977	1
W	Splash Guard - Side	3108688	2	3108688	2	3108688	2	3108688	2	3108688	2

		DZC-048-DWR-R		DZC-057-DWR-R		DZC-075-DWR-R		DZC-096-DWR-R		DZC-144-DWR-R	
Dwg Ref	Part	Part #	Qty	Part #	Qty	Part #	Qty	Part #	Qty	Part #	Qty
A	Glass - Top of Case	3099410150	1	3102276150	1	3117584150	1	3099410150	2	3099410150	3
B	Glass Hardware - Verical Glass (BLACK)	3125867	1	3125868	1	3125869	1	3125867	2	3125867	3
	Glass Hardware - Double Curve Glass (BLACK)										
	Glass Hardware - Verical Glass (SILVER)	3125882	1	3125883	1	3125884	1	3125882	2	3125882	3
	Glass Hardware - Double Curve Glass (SILVER)										
	Glass Hardware - Straight Glass (BLACK)	3125870	1	3125871	1	3125872	1	3125870	2	3125870	3
	Glass Hardware - Straight Glass (SILVER)	3125885	1	3125886	1	3125887	1	3125885	2	3125885	3
C	Glass - Front of Case - Vertical Glass	3102456150	1	3102457150	1	3102459150	1	3102456150	2	3102456150	3
	Glass - Front of Case - Double Curve Glass	3102464150	1	3102465150	1	3102467150	1	3102464150	2	3102464150	3
	Glass - Front of Case - Straight Glass	3102472150	1	3102473150	1	3102474150	1	3102472150	2	3102472150	3
E	Fan Motor - Airsweep 4.7"x4.7" Boxed	0522287EF	2	0522287EF	2	0522287EF	2	0522287EF	4	0522287EF	6
F	Power Supply - 100W 24VDC	3117868	2	3117868	2	3117868	2	3117868	3	3117868	3
G	Heater(s) - Airsweep	125-02-3033	1	125-02-3034	1	125-02-3032	1	125-01-3031	1	125-01-3030	1
J	Hand/Grip Rail - Black Extrustion for Front Glass	0459613	1	0459614	1	00001024	1	0459613	2	0459613	3
K	Fan Motor - Evaporator	0477653	2	0477653	2	0477653	3	0477653	4	0477653	6
L	Fan Blade for Evaporator Motor	0409512	2	0409511	2	0428111	3	0409512	4	0409512	6
M	Fan Harness for Evaporator Motor	0443521A	1	0443521A	1	0443521A	2	0443521A	2	0443521A	3
N	Evaporator Coil	0500343	1	0500343	1	0500337	1	0500335	1	0500333	1
Q	Thermometer, Digital 25SD 90" Wire	3033723500	1	3033723500	1	3033723500	1	3033723500	1	3033723500	1
T	Door Assembly - Clear Glass	3038506450	1	3127241450	1	3127247450	1	3038506450	2	3038506450	3
	Door Assembly - Mirrored Glass	3049006450	1	3127238450	1	3127244450	1	3049006450	2	3049006450	3
	Door - Rear Inside Sliding Clear Glass	3038507450	1	3127242450	1	3127248450	1	3038507450	2	3038507450	3
	Door - Rear Outside Sliding Clear Glass	3038508450	1	3127243450	1	3127249450	1	3038508450	2	3038508450	3
	Door - Rear Inside Sliding Mirrored	3049007450	1	3127239450	1	3127245450	1	3049007450	2	3049007450	3
	Door - Rear Outside Sliding Mirrored	3049008450	1	3127240450	1	3127246450	1	3049008450	2	3049008450	3
X	Bumpon - Rear Top (Glass Support)	2H13602	3	2H13602	3	2H13602	4	2H13602	5	2H13602	9
	THE REPLACEMENT PARTS BELOW REQUIRE A PAINT CODE. IF YOU NEED THE CASE PAINT CODE, PLEASE CONTACT YOUR HUSSMANN REPRESENTATIVE WITH THE CASE MODEL AND SERIAL NUMBER. COMMON PAINT CODES ARE: 700 = WHITE / 701 = SHADOW BLACK.										
H	Upper Body Panel - Front	KIT1	1	KIT2	1	KIT3	1	KIT4	1	KIT6	1
I	Lower Panel - Front	3099408	1	3102253	1	3119279	1	3098781	1	3101982	1
O	Discharge Grill - Rear	3091259	1	3102254	1	3119283	1	3091259	2	3091259	3
P	Cover - Top Rear	3099407	1	3102238	1	3119153	1	3091231	1	3101968	1
R	Cover Right - Side Rear	3107164	1	3107164	1	3107164	1	3107164	1	3107164	1
S	Cover Left - Side Rear	3107165	1	3107165	1	3107165	1	3107165	1	3107165	1
U	Upper Body Panel - Rear	3099392	1	3102246	1	3119286	1	3098728	1	3101975	1
V	Splash Guard - Rear	3099409	1	3102248	1	3119287	1	3098782	1	3101977	1
W	Splash Guard - Side	3108688	2	3108688	2	3108688	2	3108688	2	3108688	2
Y	Cover Deck - Side	3094308	2	3094308	2	3094308	2	3094308	2	3094308	2
	Cover Deck - Center					3122801 / 3122803	1 EA				
Z	Drawer Handle	3048656800	1	3048656800	1	3048656800	2	3048656800	2	3048656800	3
AA	Drawer Gasket	3094307750	1	3122795750	1	3122796750	1	3094307750	2	3094307750	3
AB	Drawer Slide	3037580800	1	3037580800	1	3037580800	2	3037580800	2	3037580800	3

		DZC-048-R		DZC-057-R		DZC-075-R		DZC-096-R		DZC-144-R	
Part		**PART#**	**QTY**	**PART#**	**QTY**	**PART#**	**QTY**	**PART#**	**QTY**	**PART#**	**QTY**
HINGE - Verical & Double Curve Glass	Assembly	3125867	1	3125868	1	3125869	1	3125867	2	3125867	3
BLOCK ASSY	Sub Assy	3125969	2	3125969	2	3125969	2	3125969	4	3125969	6
CLAMP	Sub Assy	3125873	1	3125874	1	3125875	1	3125873	2	3125873	3
REAR PROFILE	Sub Assy	3125879	1	3125880	1	3125881	1	3125879	2	3125879	3
PISTONS - Vertical Glass Pistons	Part	3125899	2	3125900	2	3125903	2	3125899	4	3125899	6
PISTONS - Double Curve Glass Pistons	Part	3125899	2	3125900	2	3125903	2	3125899	4	3125899	6
C-CLIPS	Part	3134674	8	3134674	8	3134674	8	3134674	16	3134674	24

LIST OF ALL PISTONS	
PART#	**DESCRIPTION**
3125897	GAS SPRING-DZC 100N 007.3010.00
3125898	GAS SPRING-DZC 200N 007.3020.00
3125899	GAS SPRING-DZC 300N 007.3030.00
3125900	GAS SPRING-DZC 400N 007.3040.00
3125901	GAS SPRING-DZC 500N 007.3050.00
3125902	GAS SPRING-DZC 600N 007.3060.00
3125903	GAS SPRING-DZC 700N 007.3070.00
3125904	GAS SPRING-DZC 800N 007.3080.00
3125905	GAS SPRING-DZC 900N 007.3090.00

HUSSMANN®

To obtain warranty information or other support, contact your Hussmann representative. Please include the model and serial number of the product.

Hussmann Warranty / Technical Assistance
(800) 592-2060

Hussmann Corporation, Corporate Headquarters: Bridgeton, Missouri 63044 2014