HUSSMANN®/SPECIALTY | 0924

Q3 VERTICAL BLOWER MEAT SERVICE MERCHANDISER

USER MANUAL

Q3 - **Q3-MV-BC-8 / Straight Vertical Case**
- **Q3-MV-BC-12 / Straight Vertical Case**

Remote

Table of Contents

Notice **3**

General Information **4**

Case Sections **5**

Installation **6**
- Unloading
  - Receiving Case 6
  - Snapping Chalk Lines 6
  - Placement 7
- Lifting / Panels
  - Q3MV-BC Lifting and Transport Instructions 8
  - Front Body Panel Install 9
  - Fasten Front Body Panel Install 9
  - Fasten Rear Body Panel Install 9
- Leveling
  - Leveler Adjustment 10
  - Shim The Case 10
- Joining
  - Parts List 11
  - Q3-MV-BC Case Adjustments 12
  - Joining Preparation 15

Refrigeration **18**
- Piping
  - Refrigerant 18
  - Refrigerant piping 18
  - Line Sizing 18
  - Oil Traps 18
  - Refrigeration Spec Sheet 19

Electrical **20**
- Electrical Info
  - Merchandiser Electrical Data 20
  - Electrical Connections 20
  - Field Wiring 20
  - Identification of Wiring 20
  - Remove Rear Raceway 21
  - Electrical Conduit (Electrical Box) 21
  - Wiring Diagram Index 22

Miatech Fogging System **46**
- Setup and Installation
  - Fogging System Mounting 47
  - Fogger Nozzle Install 47
  - Water and Air Hose Routing 49
  - Case Settings 50
  - Miatech Controller Settings 51
  - Reverse Osmosis Filter 51
  - Field Electrical Connections 51
  - System Clock 54
  - Fogger System Troubleshooting 57

User Information **60**
- General
  - Start Up 60
  - Load Limits 60
- Maintenance
  - Case Cleaning 63
  - Exterior Surfaces 63
  - Interior Surfaces 63
  - Troubleshooting 65

DOE 2012 Energy Efficiency Compliant

Hussmann refrigerated merchandisers configured for sale for use in the United States meet or surpass the requirements of the DOE 2012 energy efficiency standards.

Notice

WARNING

1. DO NOT overload or stand over top of case. Glass breakage may occur if precautions are disregarded.
   *Broken glass can cause lacerations, cuts, and puncture wounds which may result in severed arteries or tendons, amputations, eye injuries, or exposure to disease.

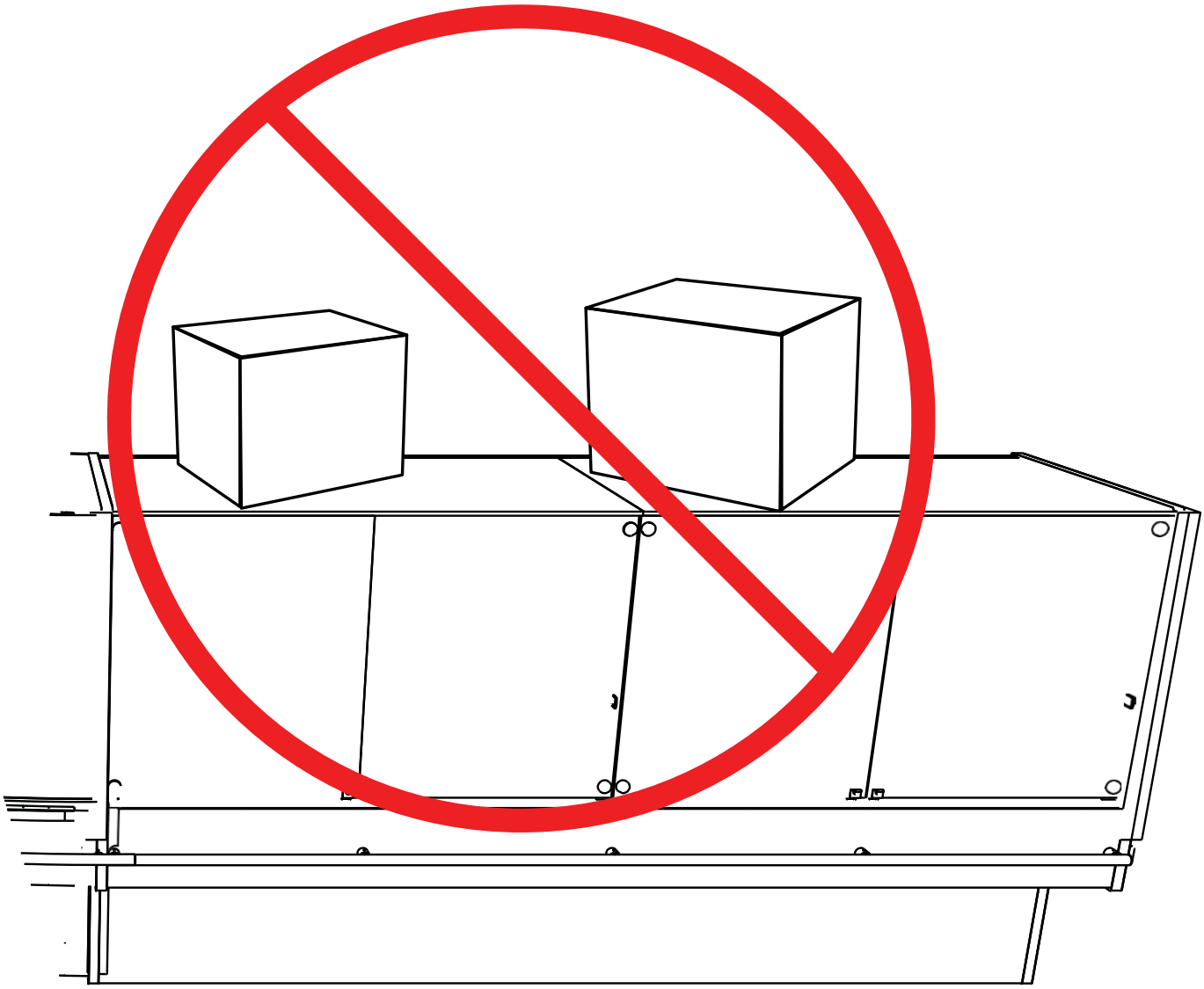

General Information

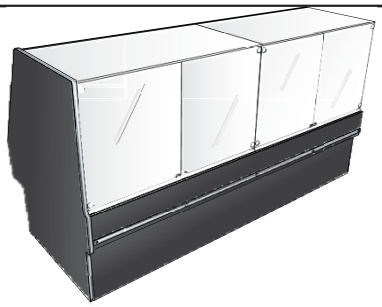

Case Description:

Description: Refrigerated Vertical Blower Meat Service Merchandiser

Shipping Damage: All equipment should be thoroughly examined for shipping damage before and during unloading. This equipment has been carefully inspected at our factory and the carrier has assumed responsibility for safe arrival. If damaged, either apparent or concealed, claim must be made to the carrier Immediately.

Apparent Loss or Damage: If there is an obvious loss or damage, it must be noted on the freight bill or express receipt and signed by the carrier's agent; otherwise, carrier may refuse claim. The carrier will supply necessary claim forms.

Concealed Loss or Damage: When loss or damage is not apparent until after all equipment is uncrated, a claim for concealed damage is made. Make request in writing to carrier for inspection within 15 days, and retain all packaging. The carrier will supply inspection report and required claim forms.

Shortages: Check your shipment for any possible shortages of material. If a shortage should exist and is found to be the responsibility of Hussmann Chino, notify Hussmann Chino. If such a shortage involves the carrier, notify the carrier immediately, and request an inspection. Hussmann Chino will acknowledge shortages within ten days from receipt of equipment.

Hussmann Chino Product Control: The serial number and shipping date of all equipment has been recorded in Hussmann's files for warranty and replacement part purposes. All correspondence pertaining to warranty or parts ordering must include the serial number of each piece of equipment involved, in order to provide the customer with the correct parts.

Location/Store Conditions: The Q3-MV-BC refrigerated merchandiser has been designed for use only in air conditioned stores where temperature and humidity are maintained at 80°F and 55% relative humidity or 75°F and 55% relative humidity. DO NOT allow air conditioning, electric fans, ovens, open doors or windows (etc.) to create air currents around the merchandiser, as this will impair its correct operation.

Keep this booklet with the case at all times for future reference.

HUSSMANN®/CHINO
A publication of HUSSMANN® Chino
13770 Ramona Avenue • Chino, California 91710
(909) 628-8942 FAX
(909) 590-4910
(800) 592-2060

ATTENTION INSTALLER

This equipment is to be installed to comply with the applicable NEC, Federal, State, and Local Plumbing and Construction Code having jurisdiction.

Case Sections

Q3-MV-BC Multi-Deck Service Deli Case

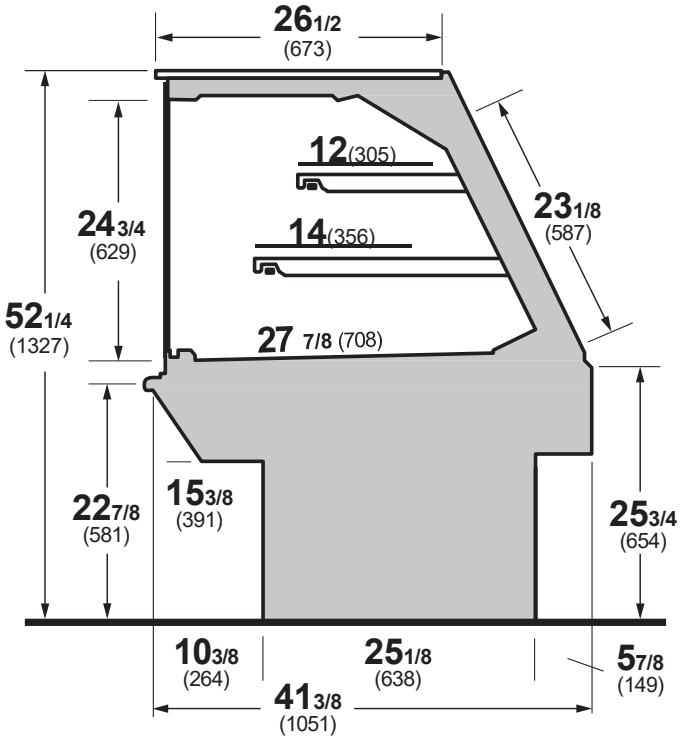

Q3-MV-BC

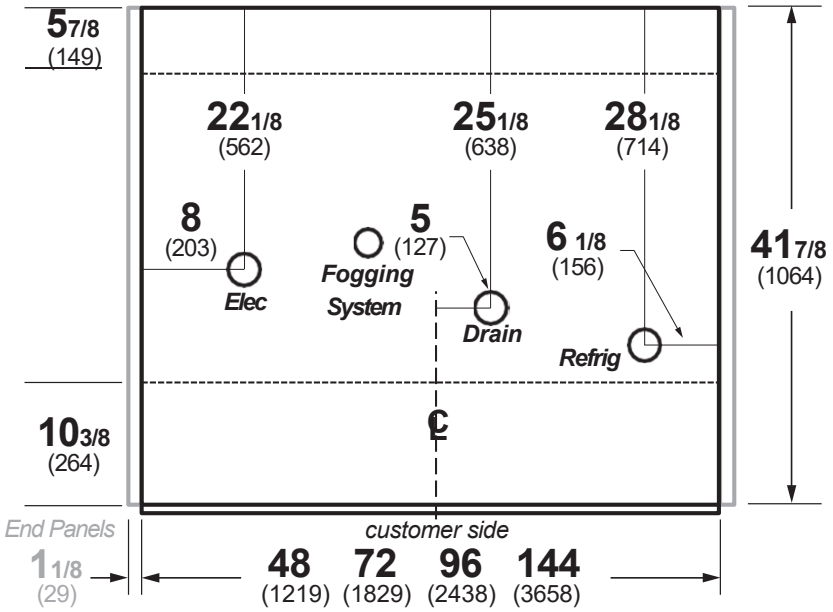

Installation

NOTICE

Do NOT remove Foam Blocks from shelves and glass until the merchandisers are positioned for installation. Shelves or merchandising glass may be damaged.

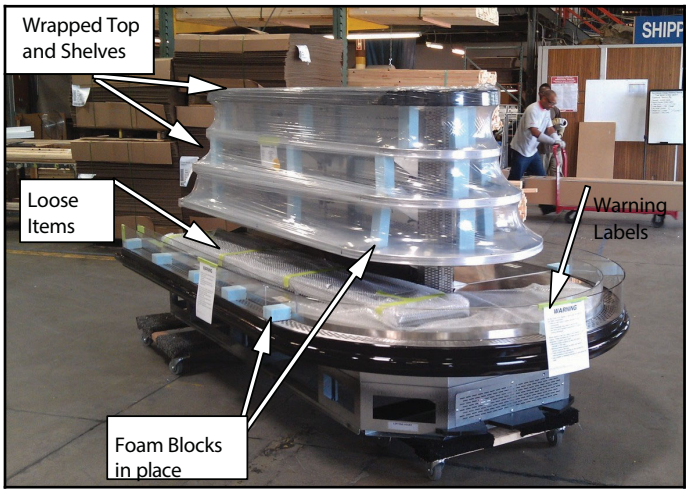

Case is to arrive at store as was shipped form factory. See reference above for proper shipment referencing.

Receiving Case

Upon receiving your new Hussmann Case all equipment should be thoroughly examined for shipping damage before and during unloading. This equipment has been carefully inspected at our factory. Any claim for loss or damage must be made to the carrier. The carrier will provide any necessary inspection reports/ or claim form. If there is obvious loss or damage, it must be noted on the freight bill or express receipt and signed by the carrier's agent; otherwise carrier may refuse claim.

Snapping Chalk Lines

Prepare permanent positioning by marking floors with Chalk snap lines where cases are to be located. Chalk lines are to run along the base or legs of cases.

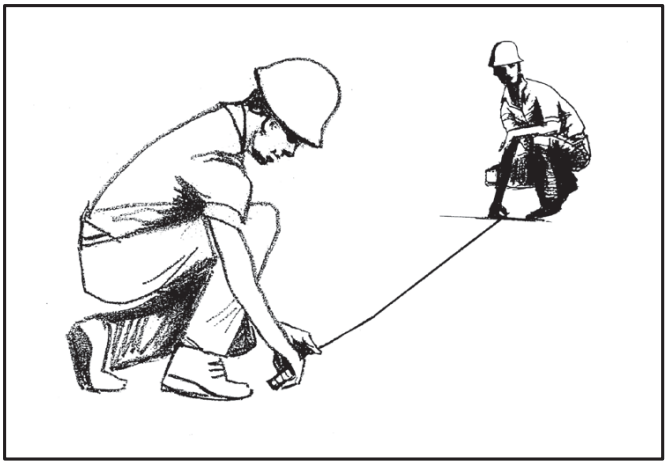

Installation (cont'd)

Placement

Important: See lifting instructions to properly lift case when being placed on dollies or permanent location. (See page 8 for Lifting Instructions.)

First remove Blocks and L Brackets around the case from pallet.

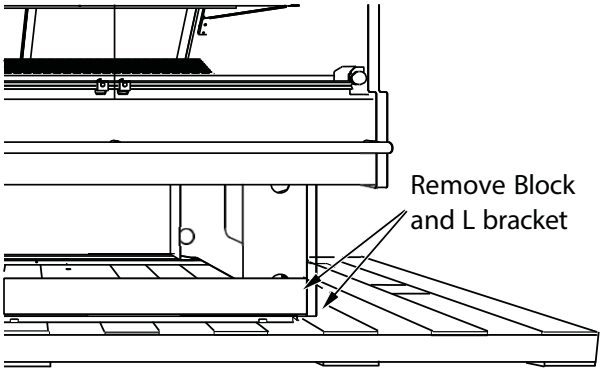

Proceed by setting forklifts under specified locations as instructed in the Lifting Instructions (pg. 8.) Be careful not to damage drains or near components when placing forks underneath case. A spotter is mandatory to ensure no damage is caused to the case. Lift case and replace with dollies, place near or in permanent location.

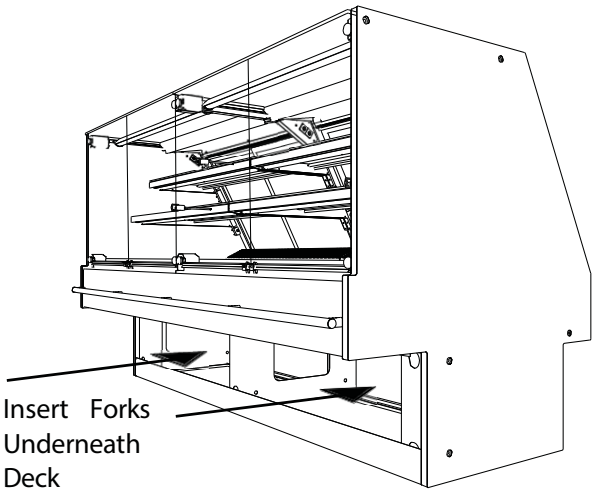

Move the fixture as close as possible to its permanent location and then remove all packaging and preparing to remove off Skid. Remove all separately packed accessories such as kits, and panels. Check for damage before discarding packaging.

In the case a fork lift truck is not available follow the demonstration below to properly lift case using a Johnson Bar (J-Bar) to place on dollies to traffic from start point to placement area.

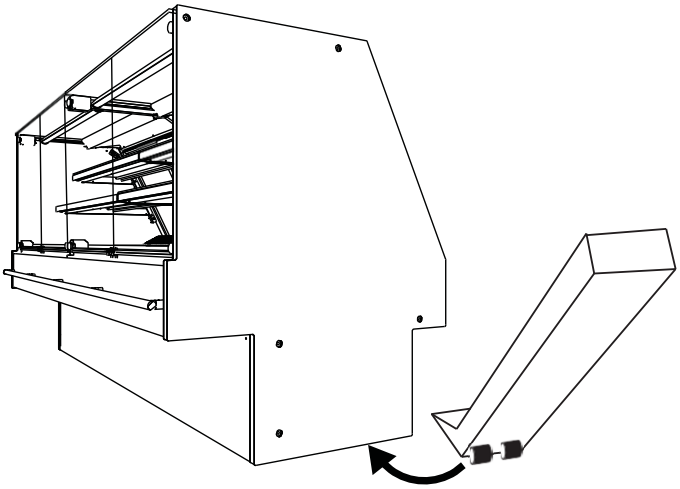

Place J-Bar underneath base of merchandiser to gain leverage, once lifted place Dollie underneath first end and slowly lower onto dollie ensuring merchandiser is placed on stable location. Proceed to opposite end and repeat.

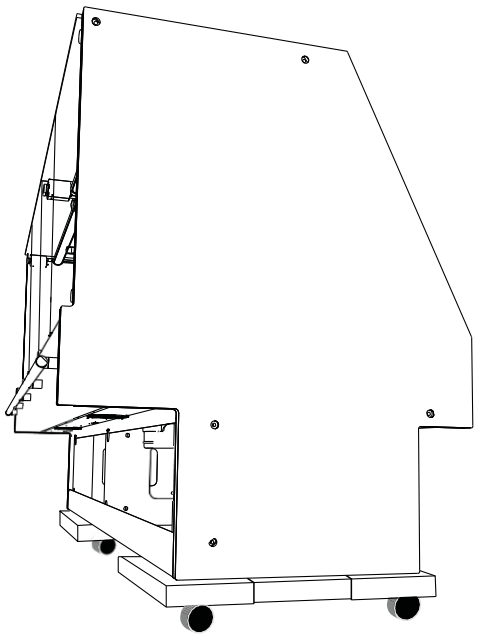

Installation (cont'd)

Q3-MV-BC Lifting and Transport Instructions

1. The Q3-MV-BC can be lifted by a forklift at typical lifting points.

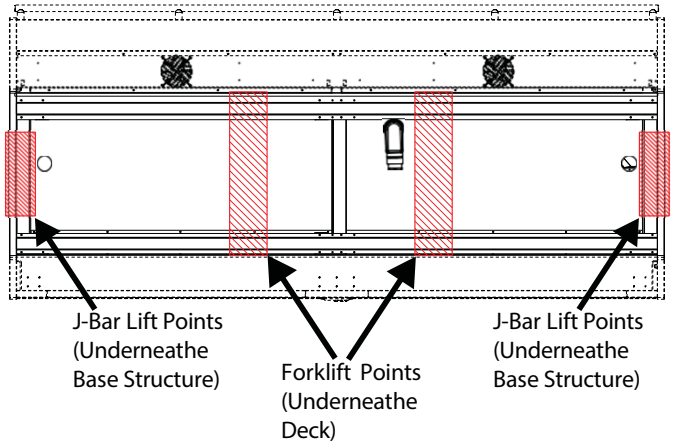

⚠WARNING

Improper placement of forks may damage drainage piping. Use a spotter when placing forks. Make sure that piping will not be damaged. Use J-Bars or Jacks if forks cannot be used safely

2. Ensure lower body panels are removed before lifting with a forklift. Serious damage will occur if the body panels are not removed.
3. Make sure that fork spacing and width will not damage drain or come in contact with piping, or electrical lines
4. Be sure that the forks are long enough to support beyond the center of the case but not damage near components. Check for proper balance before moving. A minimum fork length of 36" is recommended for 68" wide cases
5. The Q3-MV-BC merchandiser can be raised at one end underneath the deck with a forklift to allow the placement of rollers or dollies.
6. Evenly support the entire base structure on rollers or dollies before attempting to move. Each Base Leg must have its own dollie to properly support the case.

Lifting Points are typical and dependent upon size of case and refrigeration application, drainage configurations will call for altercations in Lifting Zones.

Below are the following drainage configurations and lifting should be altered to the expected model.

Q3 MV-BC Drain Location

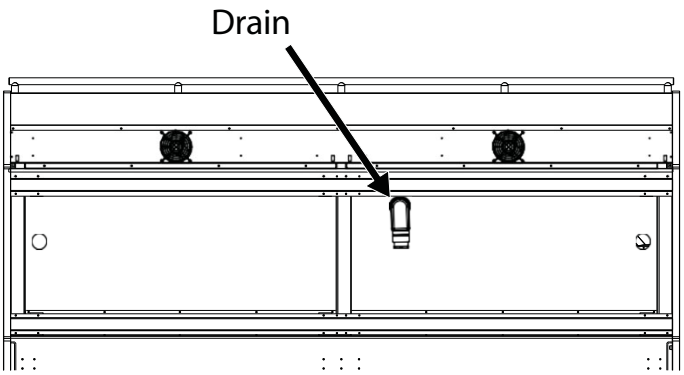

Installation (cont'd)

Front Body Panel Install

A Phillips Screw Driver/Bit will be needed to install body panels.

To begin Bottom panel assembly place panel A along side the base of the case and lower panel on to support hooks along the bottom of the base (See illustration below for details).

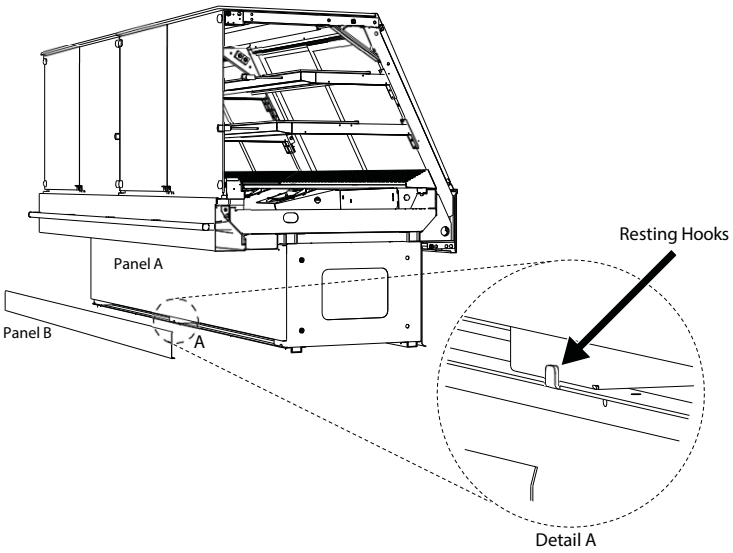

Fasten Rear Body Panel Install

(1) Align pre drilled holes to base of case
(2) Secure top and bottom of rear panel using fasteners as shown below.

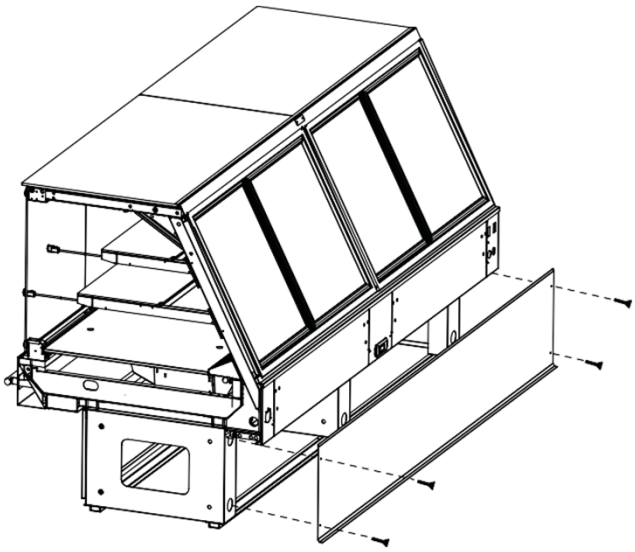

Allow front and rear body panels to slide down resting on support hooks. 2.Place L Bracket along the underside of deck to hold body panel top in place against base wall of case.

Fasten Front Body Panel Install

(1) Secure Panel A with top fasteners only.
(2) Overlay Panel B to bottom of Panel A as shown in illustration below
*Note Panel B will be attached freely with no pre drilled holes.

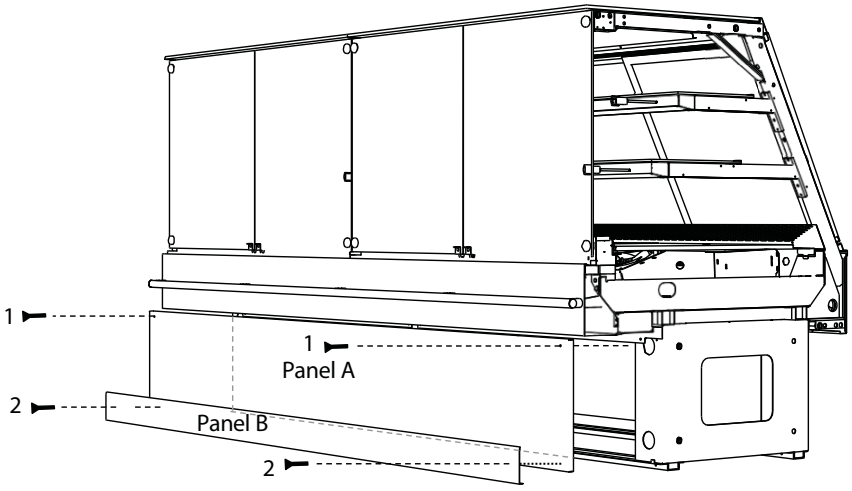

Installation (cont'd)

Leveler Adjustment

Position the case at the highest point. Set a long magnetized level (4ft [1220 mm] or more) on either underneath the deck or on top of the case. Ensure to level case from front to back and side to side.

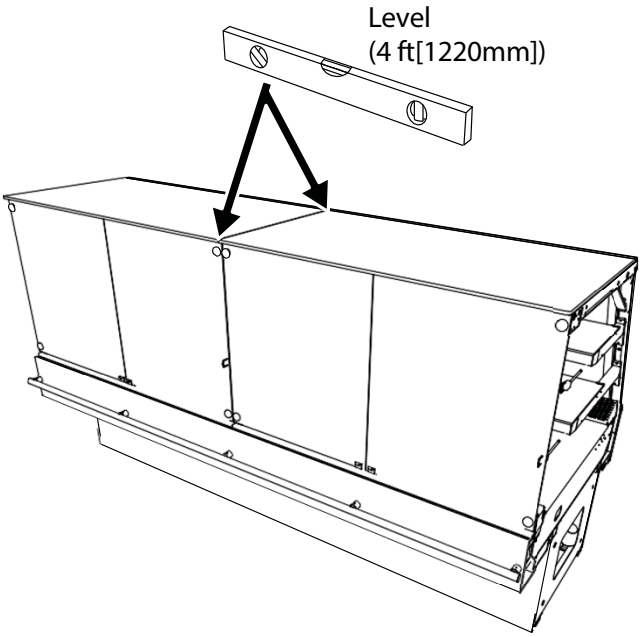

Note: To avoid removing concrete flooring, begin line up levelling from the Highest point of the store floor.

NOTICE

Longer length cases may require shims along the center portion of the case to maintain proper case performance and drainage.

Shim The Case

Use shims at each corner of the case to level out any discrepancies in order to optimize case performance and proper drainage.

Note: Shims are not Factory supplied. Contractor should carry available components. Metal Shims are recommended for use to eliminate any deterioration from shims over time.

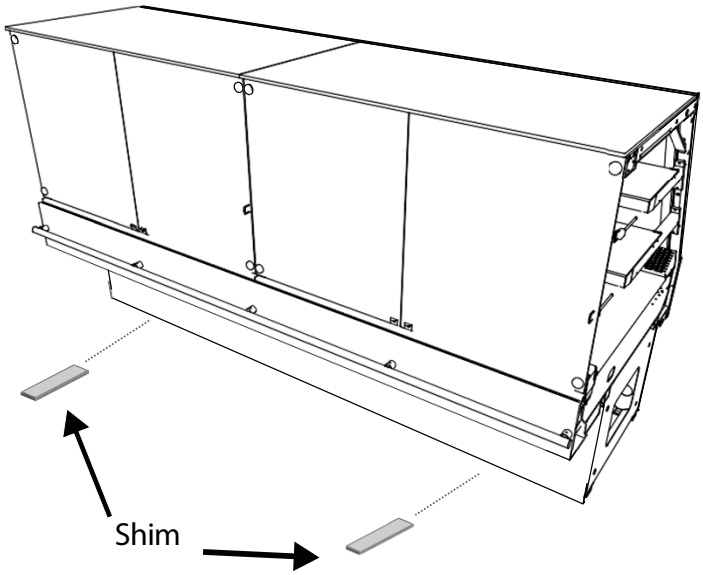

Parts List (Field installation)

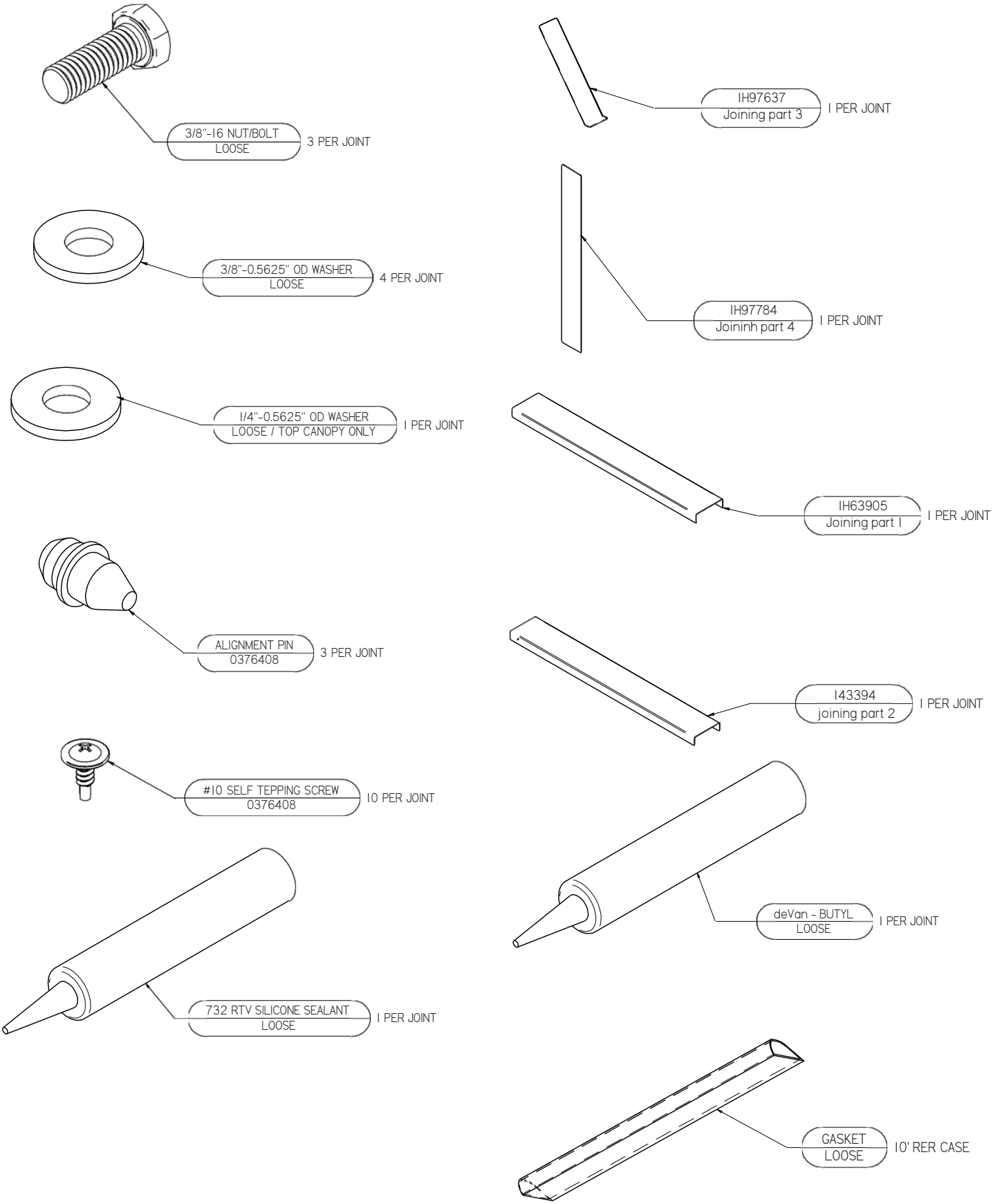

Q3 MV-BC CANOPY ARM ADJUSTMENT PROCEDURE

STEP 1. Ensure case is level to the ground. Check level at the bulkhead as shown (LEVEL 1).
STEP 2. Unscrew and remove access covers.
STEP 3. loosen top and bottom hinge vertical adjusment screws
STEP 4. Place level on the top of the upper arms as shown (LEVEL 2)
STEP 5. Using a 1/2" open-ended wrench, turn Turn buckle connecting rod until level 2 indicates that the arm is level (Note that some turn buckles may be reverse thread.. Test turning direction by observing the effect of turn direction.)

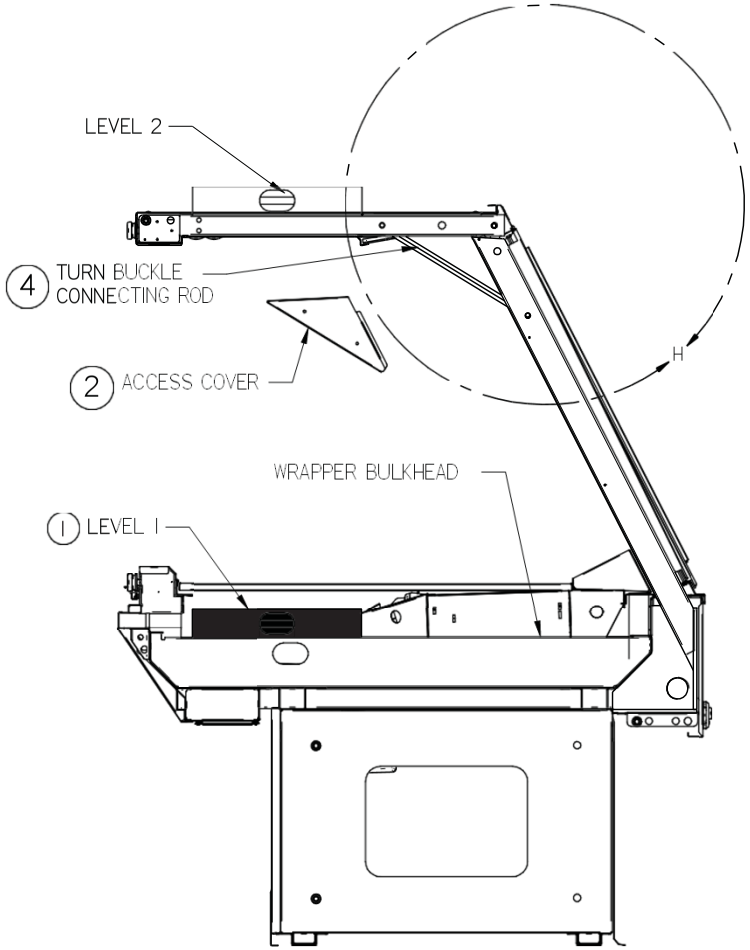

IMPORTANT: Pre Loading Canopy Arm

STEP 5. After reaching level (On LEVEL2) turn the connectors two full rotations in the direction that raises the canopy.

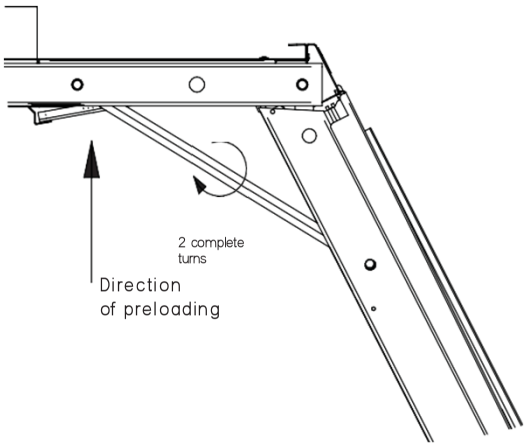

DETAIL H

Q3 MV-BC FRONT GLASS ADJUSTMENT PROCEDURE

STEP 1: Un-screw and remove all access covers from the top and bottom hinges.

STEP 2: Adjust horizontal and vertical gaps of each glass (see detail A).

STEP 3: Ensure the gaps betwen panel do not exceed more than 0.125" see detail B.

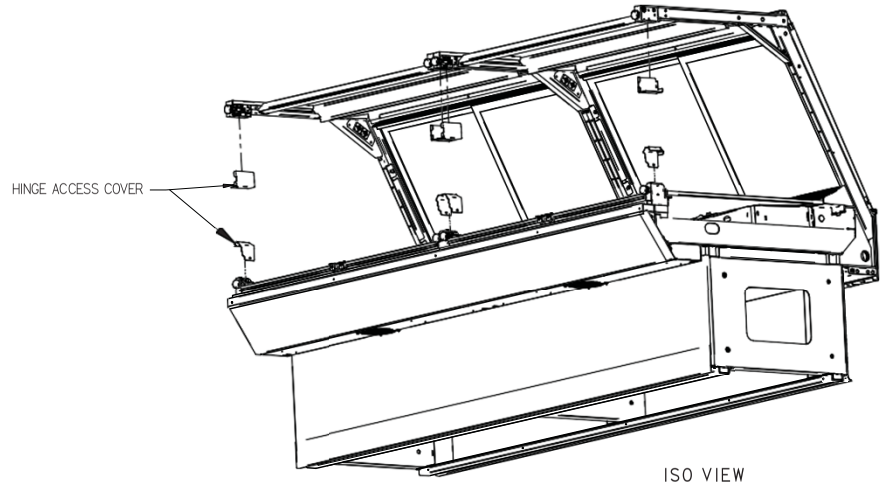

ISO VIEW

HEIGHT AJUSTMENT:
Loosen the mounting plate (2 screws) adjust glass to position and tighten screws (+/- 3 mm).

WARNING: loosen both upper and lower hinge before making height adjustments.

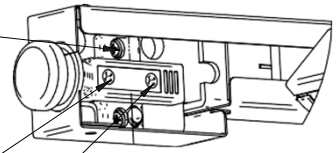

DETAIL A

HORIZONTAL ADJUSTMENT:
Rotate the front screw to increase or decrease the glass gap (1+/-2 mm).

DEPTH ADJUSTMENT:
Rotate the rear spiral tech cam to increase or decrease the glass gap (+/-3 mm).

Adjust vertical gap to maximum tolorance of 0.125".

Adjust horizontal gap to maximum tolerance of 0.125".

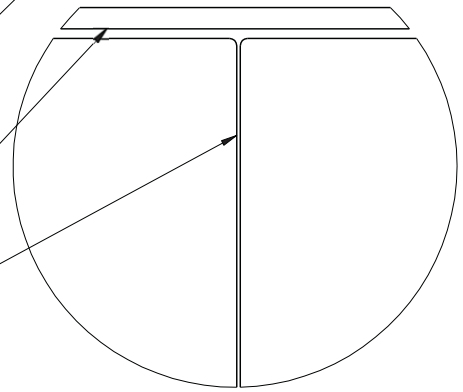

DETAIL B

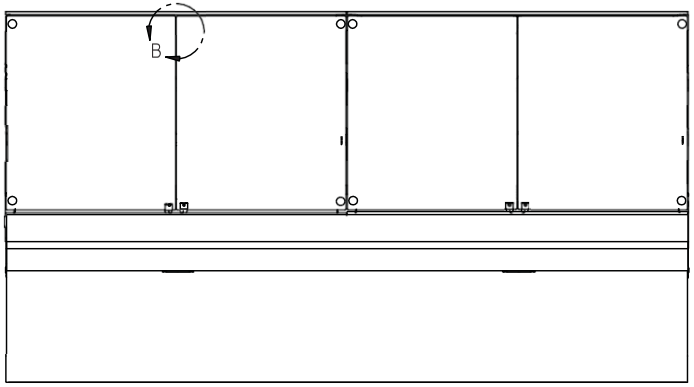

FRONT VIEW

Q3 MV-BC FOCAL POINT RE-POSITIONING

Q3-MV-BC Case Joining Preparation

STEP 1: Hold canopy light with both hands. Each hand should be as close to the end as posible (shown below).
STEP 2: Push canopy light with equal force forward or backward to desired location.
STEP 3: Rotate light to desired aim for application.
STEP 4: Tuck any excess wiring through the wiring chase.

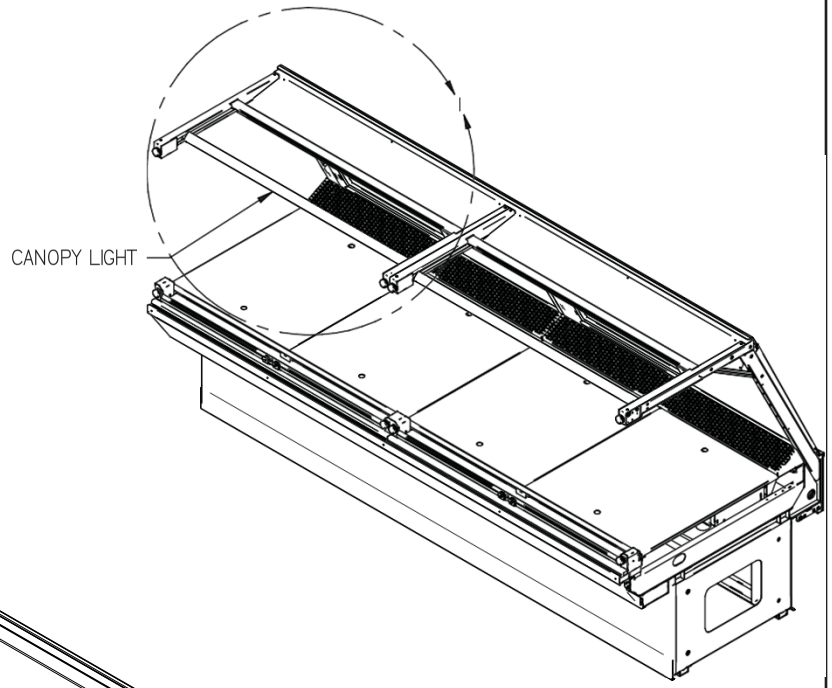

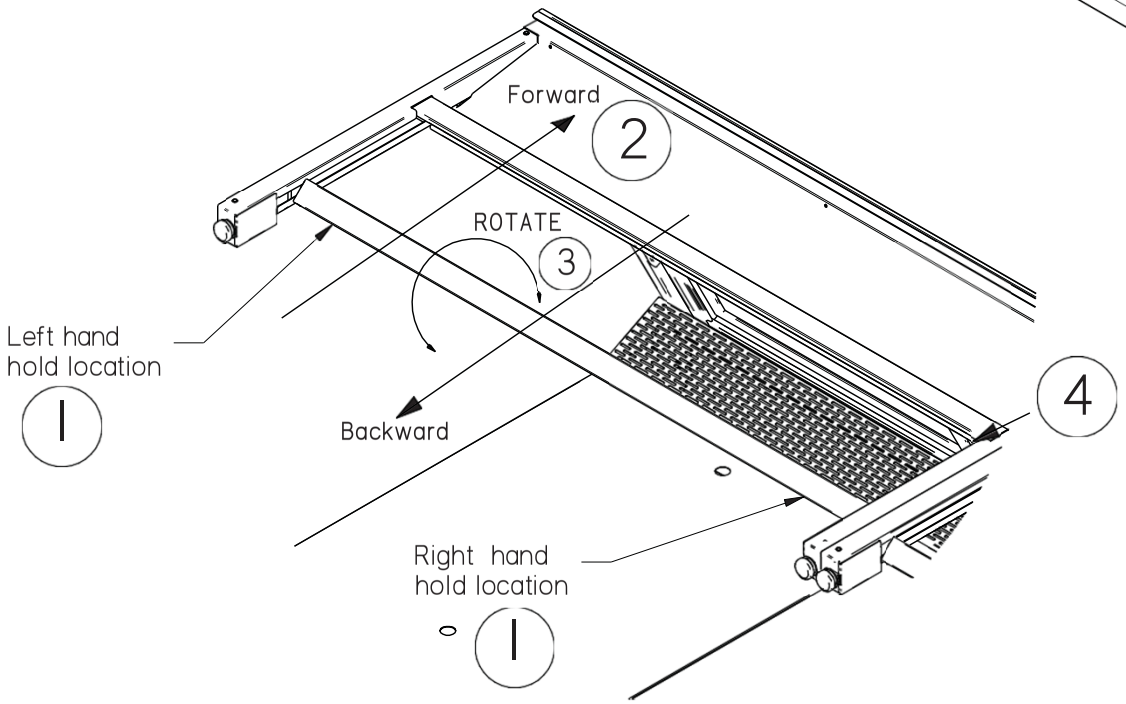

DETAIL 1

NOTE: FOCAL POINT PATENT PENDING

Q3 MV-BC JOINING CASE TO CASE - STEP I

Apply gasket to case area as shown

1/2" (13 mm) gasket are applied in the recess along the top canopy frame and vertical arm.

Apply butyl and silicone to case area as shown

Apply silicone application as shown to properly seal area. Ensure that beads of silicone are minimum of 1/2" to maximize adhesive joining preventing air leakage. Be sure to wipe off any axcess silicone around cases.

IMPORTANT

. Do not stretch gasket, especialy around the corners
. Do not butt gasket, always overlap
. Remove paper backing after gasket has been applied

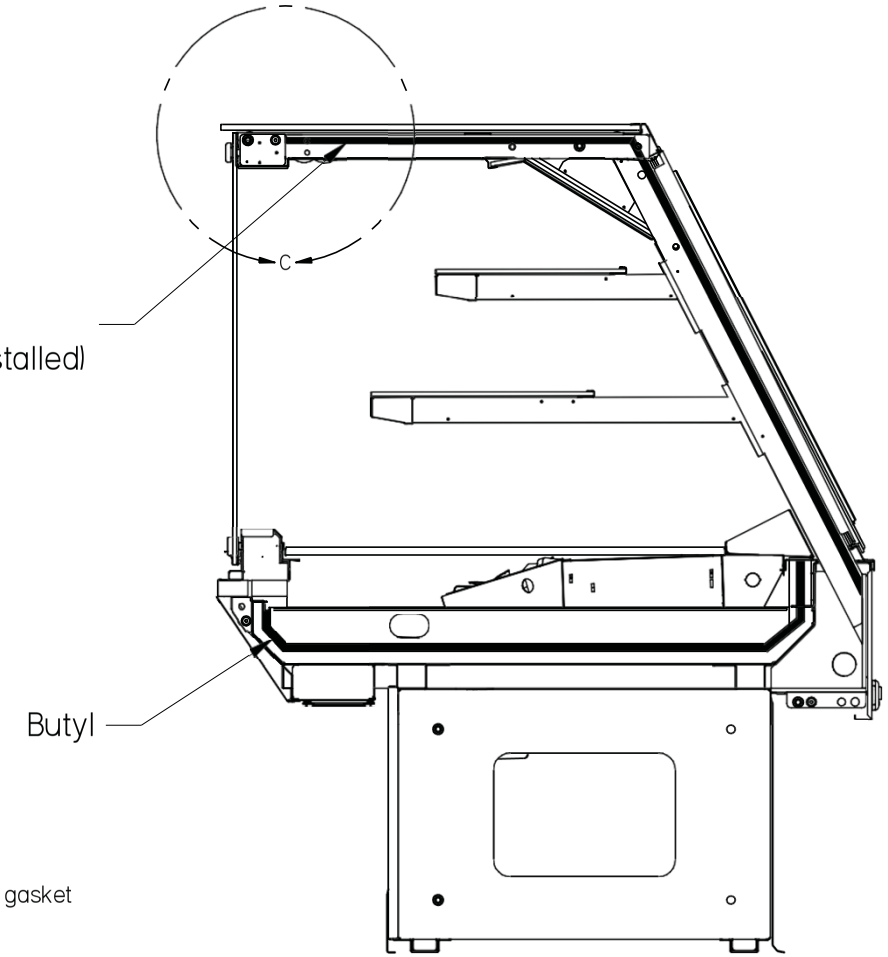

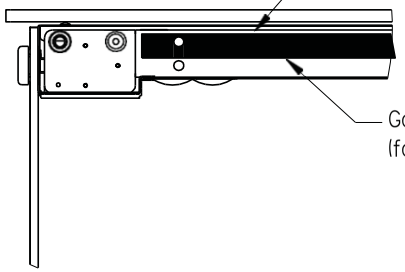

DETAIL C

Q3 MV-BC JOINING CASE TO CASE - STEP 2

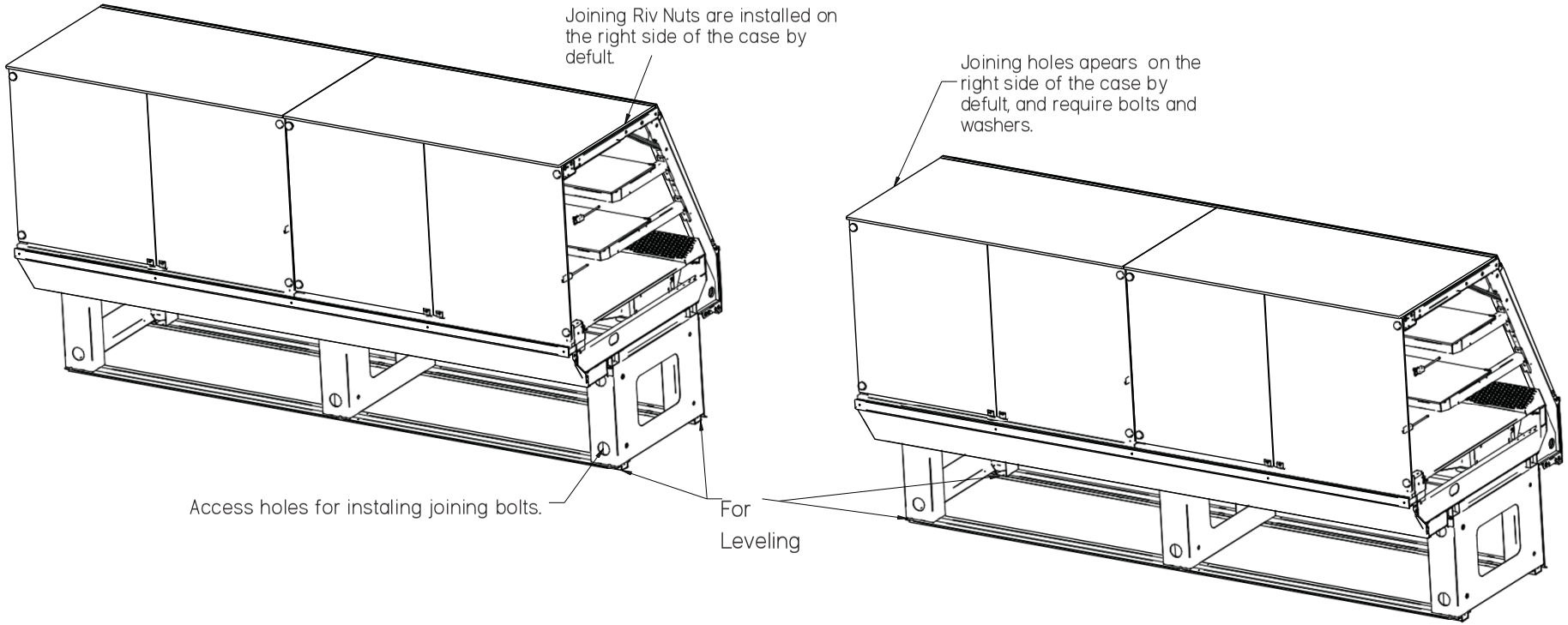

1) Level case using shims at each corner of the case to level out any discrepancies in order to optimize case Performance and proper drainage. (See Q3 MV-BC Canopy Arm Adjustment Procedure)

2) Push cases together until the alignment pin intrude to the assigned opposite holes.

4) Using 3/8" Hardware, bolt case together using washers for all five locations.

Q3 MV-BC JOINING CASE TO CASE - STEP 3

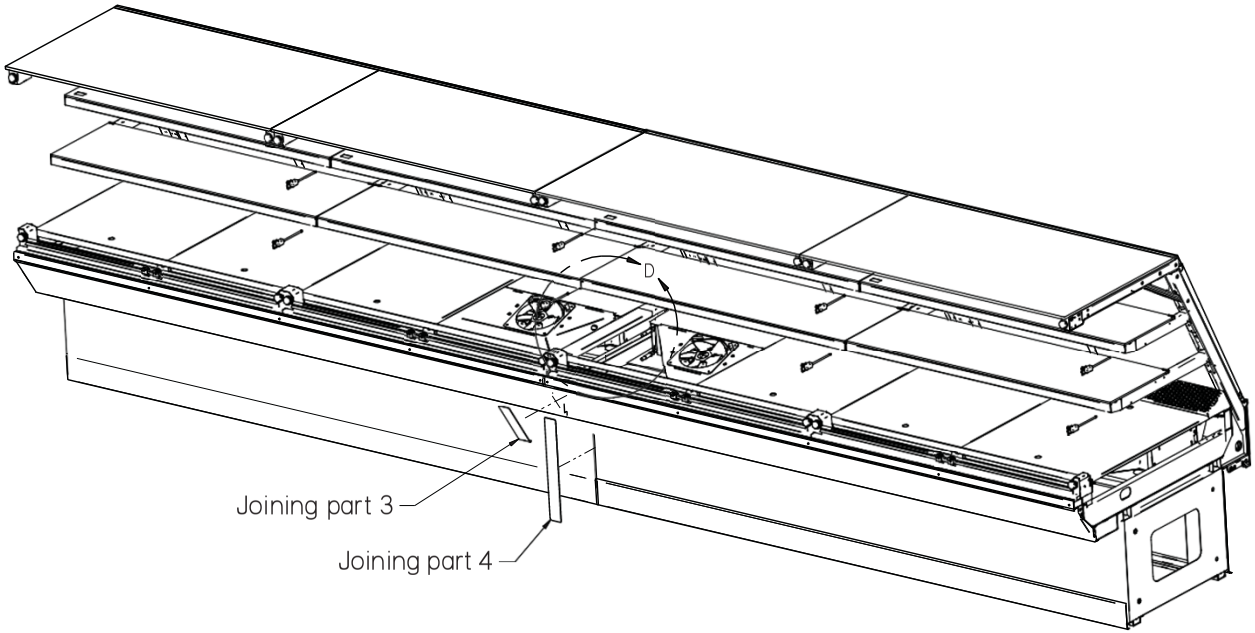

1) Remove deck pans adjacent to the cases joining line.

2) Remove rear modular DSCH adjacent to the cases joining line

3) Install joining part 1 and 2 (see part list) using silicone adhesive and push back all the way.

4) Install top joining part using silicone adhesive (see part list) and push all the way forward.

5)Using double side 3M® adhesive tape install joining parts 3 and 4 (see part list) and ensure aligned symmetrically on the top of the cases joining line.

6) Reinstall deck pans and modular DSCHs.

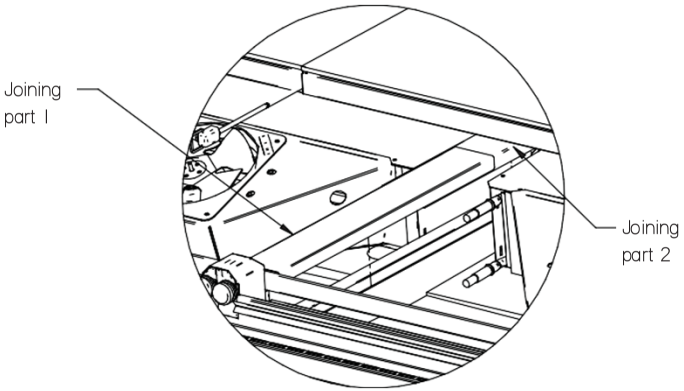

DETAIL D

Refrigeration

Refrigerant

The correct type of refrigerant will be stamped on each merchandiser's serial plate. The case refrigeration piping is pressurized with a nitrogen holding charge, leak tested and factory sealed. Before making refrigeration hookups, depress universal line valve (Shraeder Valve) to ensure that coils have maintained pressure during shipment. In the case pressure was not maintained contact your Hussmann Service Tech for further assistance.

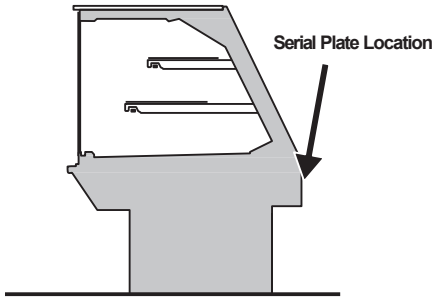

CAUTION

Refrigeration lines are under pressure. Refrigerant must be recovered before attempting to make any connections.

WARNING!

Do NOT apply thread sealer to ABS P-Trap.

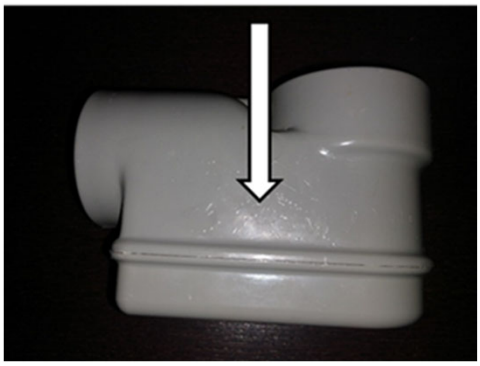

Refrigerant piping

The refrigerant line connections are at the right hand end of the case (as viewed from the front) beneath the display pans. The merchandiser will beforehand ensure an earlier cut hole through the pod to exit the merchandiser for the refrigeration lines. After connections have been made, make certain to seal this outlet thoroughly if not sealed at factory already. Seal both the inside and outside. We recommend using an expanding polyurethane foam insulation.

Line Sizing

Refrigerant should be sized as shown on the refrigeration legend that is furnished for the store or according to the ASHRAE guidelines

P-traps

P-traps must be installed at the base of all refrigerated cases. The 1 ½" P-TRAP and threaded adapter must be installed to prevent air leakage and insect entrance into the fixture.

Oil Traps

Oil traps must be installed at the base of all suction line vertical risers on refrigerated cases.

ATTENTION INSTALLER

It is the contractor's responsibility to install case(s) according to local construction and health codes.

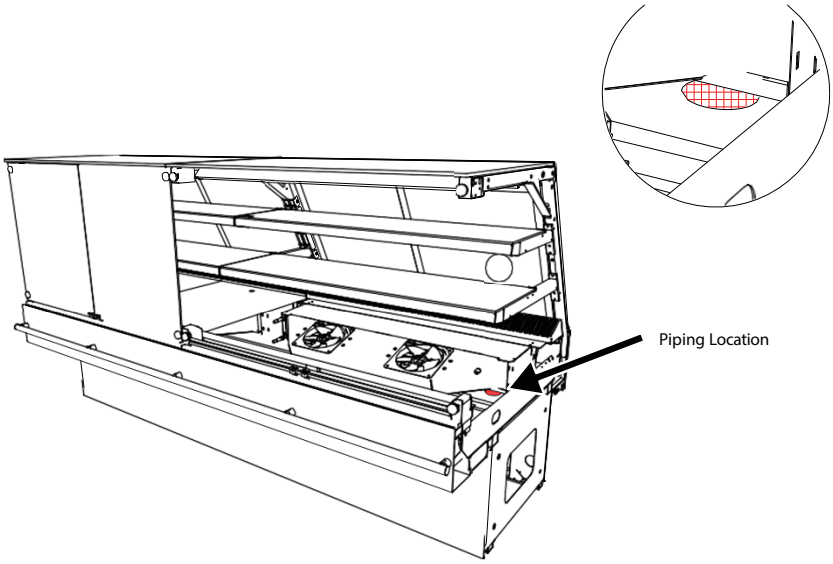

Refrigeration Spec Sheet

MEAT SERVICE CASE, VERTICAL GLASS REVISION DATE 11/05/19

HUSSMANN - Q3-MV-BC-R (CHINO)

DOE 2017 Energy Efficiency Compliant — Hussmann refrigerated merchandisers configured for sale for use in the United States meet or surpass the requirements of the DOE 2017 energy efficiency standards.

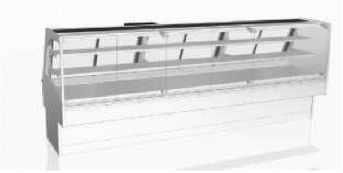

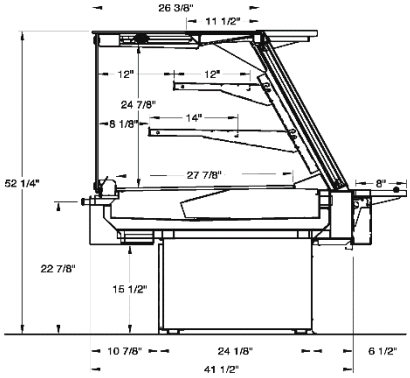

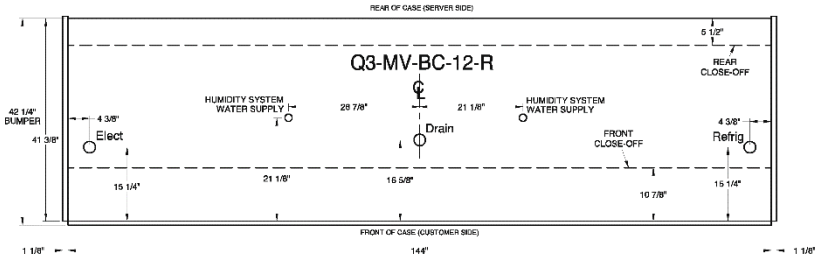

REFRIGERATION DATA:

CASE LENGTHS	CASE USAGE	CAPACITY ** (BTU/HR/FT)		TEMPERATURE (°F)				VELOCITY (FT/MIN)
		RATING CONDITION		EVAPORATOR		DISCHARGE AIR*		
		NSF 7	TYPE M	NSF 7	TYPE M	NSF 7	TYPE M	
4',6',8',10',12'	MEAT	390	330	20	24	27~29	31~32	420~450

CASE LENGTHS	EST. REFG. CHRG. (LBS) (R404A)	GLYCOL (20°F INLET, 6° RISE)	
		GPM	PSI
4'	TBD	TBD	TBD
6'	TBD	TBD	TBD
8'	TBD	TBD	TBD
10'	TBD	TBD	TBD
12'	TBD	TBD	TBD

***DISCHARGE AIR MEASURED INSIDE DISCHARGE AIR GRILL IN THE REAR OF THE CASE**

****REFRIGERATION NOTES:**

1) BTU'S INCLUDE CANOPY LIGHTS AND TWO ROWS OF SHELF LIGHTS.
2) AHRI 1200 RATING POINT FOR ENERGY CONSUMPTION COMPARISON ONLY
3) USE DEW POINT FOR HIGH GLIDE REFRIGERANTS. CARE SHOULD BE TAKEN TO USE THE DEW POINT IN P/T TABLES FOR MEASURING AND ADJUSTING SUPERHEAT. ADJUST EVAPORATOR PRESSURE AS NEEDED TO MAINTAIN THE DISCHARGE AIR TEMPERATURE SHOWN.
4) RATING CONDITION FOR NSF TYPE I IS 75°F/55% RH
5) RATING CONDITION FOR TYPE M IS 68°F/50% RH
6) MISTING OPERATION NOT RECOMMENDED AT 20°F

REFRIGERATION DATA CONTINUED:

ELEC. THERMOSTAT / AIR SENSOR SETTINGS***			DEFROST TYPE****	TIME (MIN)	DEFROST FREQUENCY (#/DAY)	TERM. TEMP (°F) COIL ONLY	DRIP TIME	DEFROST WATER (LBS/DAY/FT)
USAGE	CUT IN (°F)	CUT OUT (°F)						
MEAT	35	34	OFF TIME	30	3	45	N/A	1.25

END PANEL WIDTH KEY		
# OF END PNLS	END PNL WIDTH (IN.)	TOTAL ADDED LENGTH (IN.)
1	1.125	1.125
2	1.125	2.25

*****AIR SENSOR PLACED IN RETURN AIR UNDER DECK PAN**

******DEFROST IS CARRIED OUT BY CASE CONTROLLER. DO NOT SCHEDULE DEFROSTS ON THE STORE CONTROLLER.**

ELECTRICAL DATA:

STANDARD FANS, HEATERS, LED LIGHTS (115 VOLT)

CASE LENGTH	EVAPORATOR FANS					AIRSWEEP FAN			CANOPY LIGHTS LED		OPTIONAL LED SHELF LIGHTS		MAX. LED LOAD (W/ ALL OPTIONS)		DEFROST HEATERS****		CONVENIENCE OUTLETS (OPTIONAL)		
	# OF EVAP FANS	BLADE DIA. (IN.)	BLADE PITCH (°)	AMPS	WATTS	# OF FANS	AMPS	WATTS	AMPS	WATTS	AMPS	WATTS	AMPS	WATTS	AMPS	WATTS	# OUTLETS	VOLTS	AMPS
4'	2	6.7	20	0.2	16	1	0.1	42	0.3	35	0.2	21	0.5	55	1.3	150	1	115	15
6'	4	6.7	15	0.5	32	2	0.2	18	0.4	49	0.3	30	0.7	79	2.0	225	1	115	15
8'	4	6.7	20	0.5	32	2	0.2	18	0.6	69	0.4	41	1.0	110	2.6	300	1	115	15
10'	4	6.7	25	0.5	32	3	0.2	26	0.7	80	0.5	52	1.1	132	3.3	375	1	115	15
12'	6	6.7	20	0.7	48	3	0.2	26	0.9	104	0.5	62	1.4	166	3.9	450	2	115	30

******ONLY ON DURING DEFROST**

OPTIONAL HIGH OUTPUT LED LIGHTS (115 VOLT)

CASE LENGTH	CANOPY LIGHTS H.O. LED		OPTIONAL SHELF		MAX. H.O. LED LOAD	
	AMPS	WATTS	AMPS	WATTS	AMPS	WATTS
4'	0.4	45	0.3	30	0.7	75
6'	N/A	N/A	N/A	N/A	N/A	N/A
8'	0.8	90	0.5	61	1.3	151
10'	N/A	N/A	N/A	N/A	N/A	N/A
12'	1.2	135	0.8	91	2.0	226

Electrical

Merchandiser Electrical Data

Technical data sheets are shipped with this manual. The data sheets provide merchandiser electrical data. Refer to the technical data sheets and merchandiser serial plate for electrical information.

Electrical Connections

All wiring must be in compliance with NEC and local codes. All electrical connections including both supply circuits are to be made in the electrical J-Box.

ALWAYS CHECK THE SERIAL PLATE FOR COMPONENT AMPERES

Field Wiring

Field wiring must be sized for component amperes stamped on the serial plate (refer to pg 16 for location). Actual ampere draw may be less than specified.

Identification of Wiring

Leads for all electrical circuits are identified by colored plastic bands. These bands correspond to the color code sticker (shown below) located inside the merchandiser's wireway cover.

⚠ WARNING

--LOCK OUT/ TAG OUT--

To avoid serious injury or death from electrical shock, always disconnect the electrical power at the main disconnect when servicing or replacing any electrical component. This includes, but is not limited to, such items as doors, lights, fans, heaters, and thermostats.

STANDARD CASE WIRE COLOR CODE
CODIGO DE COLORES DE LOS ALAMBRES PARA LAS VITRINAS ESTANDAR
CODE COULER POUR FILS DE BOITIER NORMALISE

COLOR DESCRIPTION	DESCRIPCION	DESCRIPTION
GROUND	TIERRA MASA	MASSE
ANTI-SWEAT	ANTICONDENSACION	ANTI-SUINTEMENT
LIGHTS	LUCES	ECLAIRAGE
RECEPTACLES	ENCHUFES	PRISE DE COURANT
T-STAT/SOLENOID 230VAC	TERMOSTATO/SOLENOIDE (230VAC)	SOUPAPE A SOLENOID (230 VAC)
T-STAT/SOLENOID 115VAC	TERMOSTATO/SOLENOIDE (115VAC)	SOUPAPE A SOLENOID (115 VAC)
T-STAT/SOLENOID 24VAC	TERMOSTATO/SOLENOIDE (24VAC)	SOUPAPE A SOLENOID (24 VAC)
FAN MOTORS	VENTILADORES	VENTILATEUR
BLUE CONDENSING UNIT	UNIDAD DE CONDENSACION	UNITE DE CONDENSATION

USE COPPER CONDUCTORS ONLY
UTILISEZ LES CONDUCTEURS DE CUIVRE SEULEMENT
UTILICE LOS CONDUCTORES DE COBRE SOLAMENTE

430-01-0338 R101003

Electrical Cont'd

Remove Rear Raceway

The Merchandisers Electrical access is located at the rear of the case. Fasteners must be removed in order to gain access. See illustration below.

Remove Rear Raceway from rear of case.

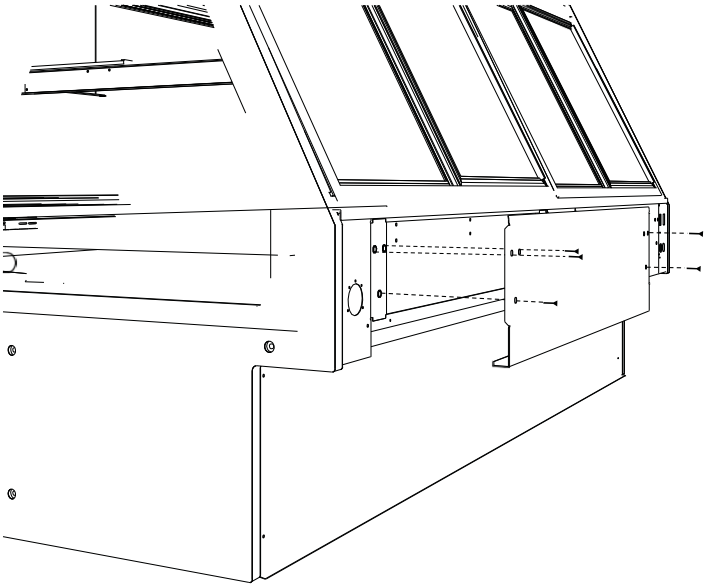

Electrical Conduit (Electrical Box)

The Merchandisers Electrical conduit can be found inside the compartment at the rear. Removing the raceway will gain access to the electrical components inside the J-Box allowing any maintenance necessary.

Electrical Conduit

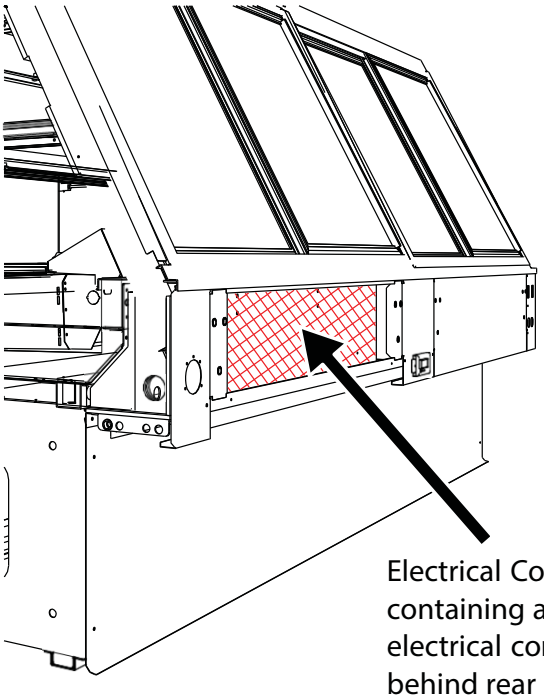

Electrical Conduit containing all necessary electrical components behind rear raceway cover

Fogging System Controls

Removing the rear panel will allow access to the control to the Fogging System Control unit.

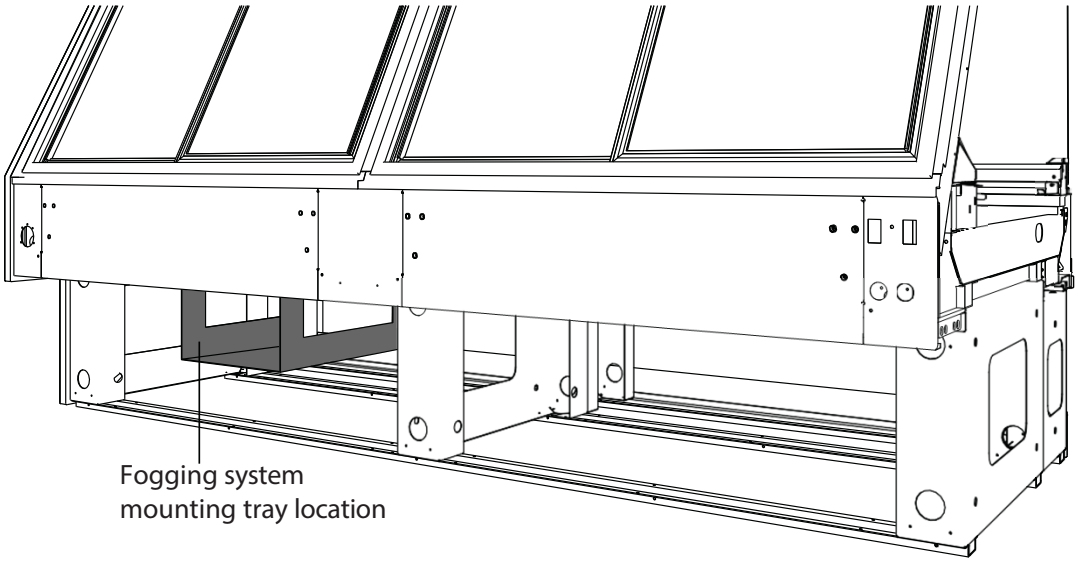

Wiring Diagram Index

Danfoss Control

Q3-MV-BC-4R W/MISTING	4'	3138688
Q3-MV-BC-6R W/MISTING	6'	3138687
Q3-MV-BC-8R W/MISTING/16' LU	8'	3055096
Q3-MV-BC-10R W/MISTING	10'	3120441
Q3-MV-BC-12R W/MISTING	12'	3053568

Dixell Control

Q3-MV-BC-4R W/XR75 CTLR	4'	3156809
Q3-MV-BC-6R W/XR75 CTLR	6'	3156810
Q3-MV-BC-6R + 6'W/XR75 CTLR	6'	3168545
Q3-MV-BC-8R W/XR75 CTLR	8'	3156571
Q3-MV-BC-12R W/XR75 CTLR	12'	3156573

CIRCUIT #1
LOADING

	120V	
L1	2.2	

REVISION HISTORY						
REV	ECN	DATE	REVISION DESCRIPTION	REV BY	CHKD BY	APPR BY
A	ECN-COD-0011854	12-10-20	RELEASED TO PRODUCTION	CB	CB	CB
B	ECN-COD-0014496	8-20-21	REVISED PROBE ON PAGE-2	CB	CB	CB

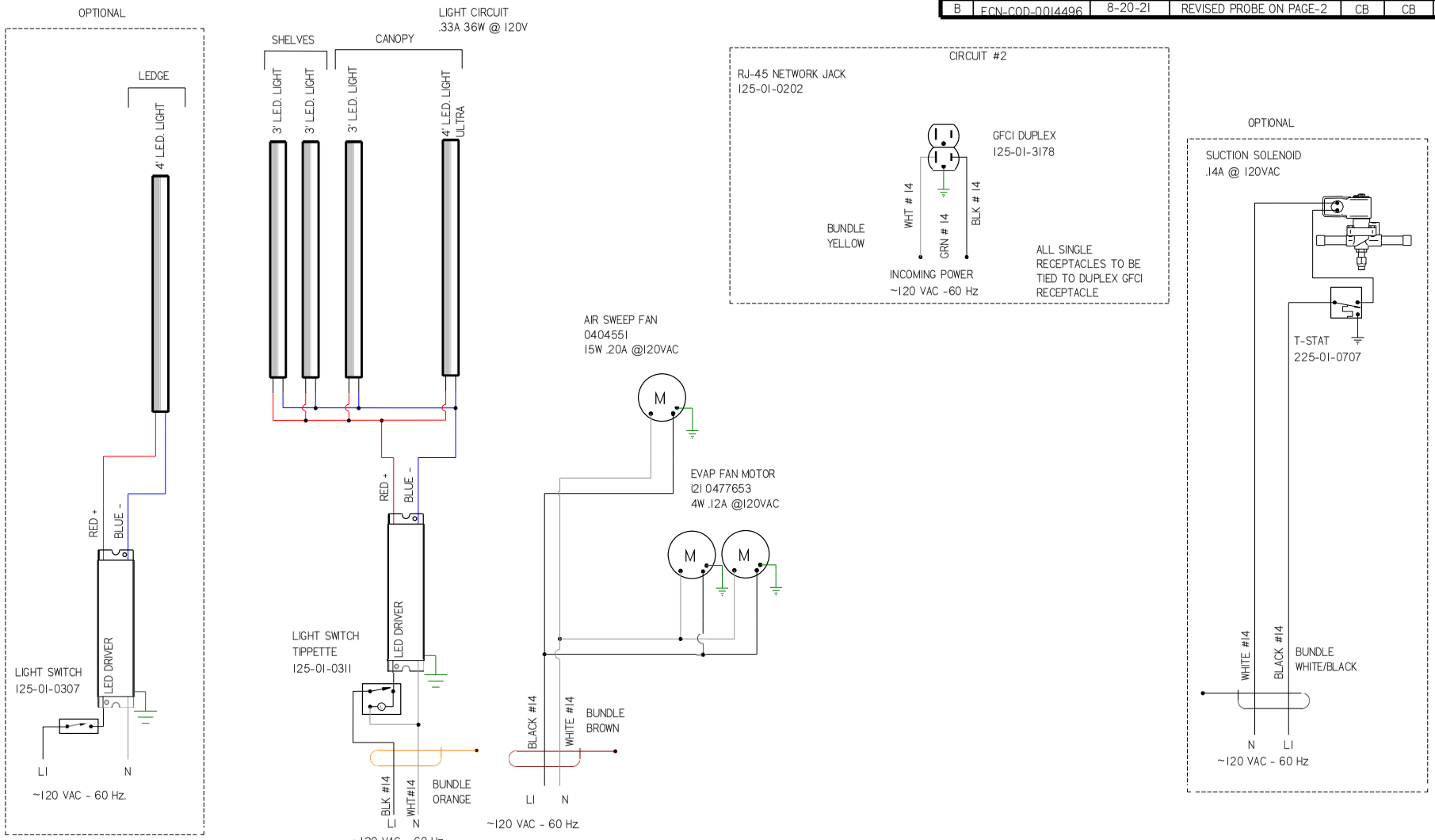

NOTES:
1. PRINTED DOCUMENT REQUIRED SETTING: ALL COLORS BLACK & WHITE
2. CASE & ANY REMOVABLE PANEL WITH ELECTRICAL PARTS MUST BE GROUNDED.
3. WHEN PASSING WIRES THROUGH METAL HOLES A GROMMET MUST BE USED

UL COLOR CODES / ABBREVIATIONS

- RED = RD
- BLACK = BK
- BLUE = BL
- YELLOW = YL
- GRAY = GY
- WHITE = WT
- GREEN = GN
- BROWN = BN
- ORANGE = OR
- VIOLET = VT

FACTORY 14GA WIRE
FACTORY 10GA WIRE
FIELD WIRE

DO NOT SCALE DRAWING
SHEET 1 OF 2

HUSSMANN®

DIAGRAM-Q3-MV-BC-4R
W/AK-CC-210 FOR
MISTING SYSTEM

P/N 3138688
REV B

CNO_10 WIRE DIAGRAM SIZE C

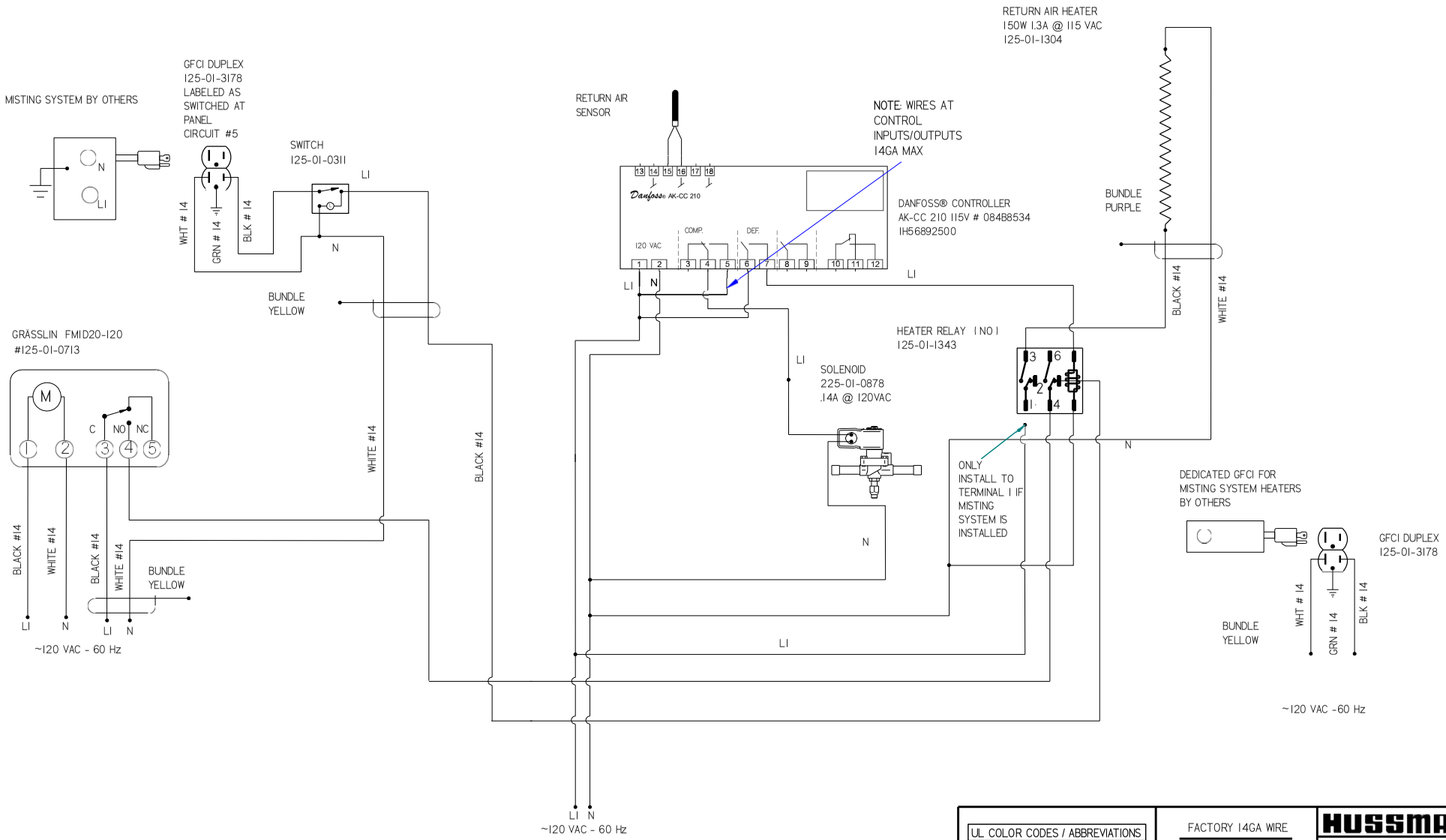

NOTES:
1. PRINTED DOCUMENT REQUIRED SETTING: ALL COLORS BLACK & WHITE
2. CASE & ANY REMOVABLE PANEL WITH ELECTRICAL PARTS MUST BE GROUNDED.
3. WHEN PASSING WIRES THROUGH METAL HOLES A GROMMET MUST BE USED

UL COLOR CODES / ABBREVIATIONS		FACTORY 14GA WIRE	HUSSMANN®
RED = RD	WHITE = WT	FACTORY 10GA WIRE	DIAGRAM-Q3-MV-BC-4R W/AK-CC-210 FOR MISTING SYSTEM
BLACK = BK	GREEN = GN	FIELD WIRE	
BLUE = BL	BROWN = BN		
YELLOW =	ORANGE =		
YL GRAY = GY	OR VIOLET = VT	DO NOT SCALE DRAWING	P/N 3138688 REV B
		SHEET 2 OF 2	

CNO_1.0 WIRE DIAGRAM SIZE C

CIRCUIT #1
LOADING

	120V	
L1	3.4	

REVISION HISTORY						
REV	ECN	DATE	REVISION DESCRIPTION	REV BY	CHKD BY	APPR BY
A	ECN-COD-0011854	12-9-20	RELEASED TO PRODUCTION	CB	CB	CB
B	ECN-COD-0014496	8-20-21	REVISED PROBE ON PAGE-2	CB	CB	CB

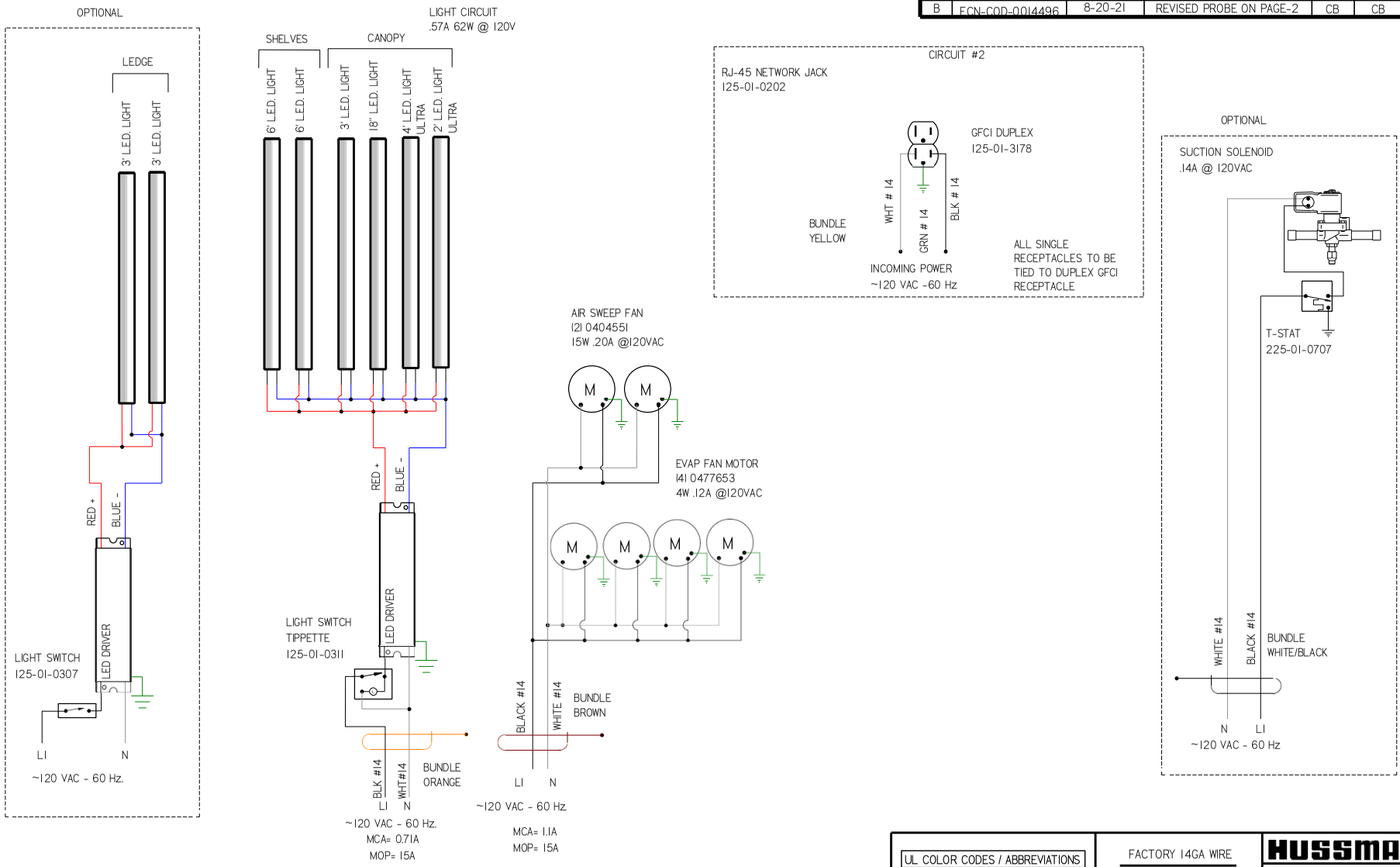

NOTES:
1. PRINTED DOCUMENT REQUIRED SETTING: ALL COLORS BLACK & WHITE
2. CASE & ANY REMOVABLE PANEL WITH ELECTRICAL PARTS MUST BE GROUNDED.
3. WHEN PASSING WIRES THROUGH METAL HOLES A GROMMET MUST BE USED

UL COLOR CODES / ABBREVIATIONS

- RED = RD
- BLACK = BK
- BLUE = BL
- YELLOW = YL
- GRAY = GY
- WHITE = WT
- GREEN = GN
- BROWN = BN
- ORANGE = OR
- VIOLET = VT

FACTORY 14GA WIRE
FACTORY 10GA WIRE
FIELD WIRE

DO NOT SCALE DRAWING
SHEET 1 OF 2

HUSSMANN®

DIAGRAM-Q3-MV-BC-6R
W/AK-CC-210 FOR
MISTING SYSTEM

P/N 3138687 REV B

CNO_1.0 WIRE DIAGRAM SIZE C

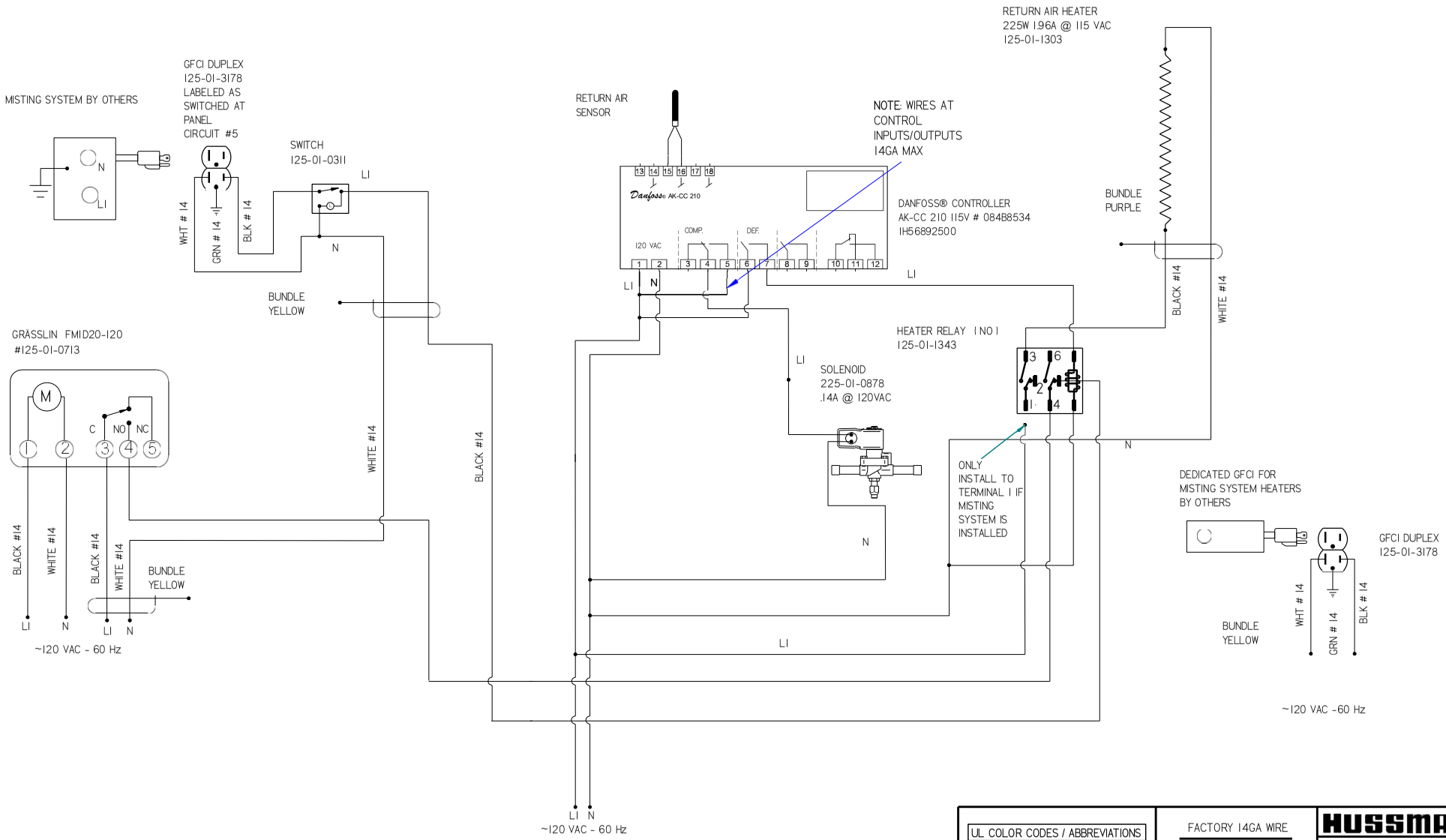

NOTES:
1. PRINTED DOCUMENT REQUIRED SETTING: ALL COLORS BLACK & WHITE
2. CASE & ANY REMOVABLE PANEL WITH ELECTRICAL PARTS MUST BE GROUNDED.
3. WHEN PASSING WIRES THROUGH METAL HOLES A GROMMET MUST BE USED

UL COLOR CODES / ABBREVIATIONS		FACTORY 14GA WIRE	HUSSMANN®
RED = RD	WHITE = WT	FACTORY 10GA WIRE	DIAGRAM-Q3-MV-BC-6R W/AK-CC-210 FOR MISTING SYSTEM
BLACK = BK	GREEN = GN	FIELD WIRE	
BLUE = BL	BROWN = BN		
YELLOW =	ORANGE =		
YL GRAY = GY	OR VIOLET = VT	DO NOT SCALE DRAWING	P/N 3138687 REV B
		SHEET 2 OF 2	

CNO_1.0 WIRE DIAGRAM SIZE C

	120V	
LI	4.4	

CIRCUIT
#1
LOADING

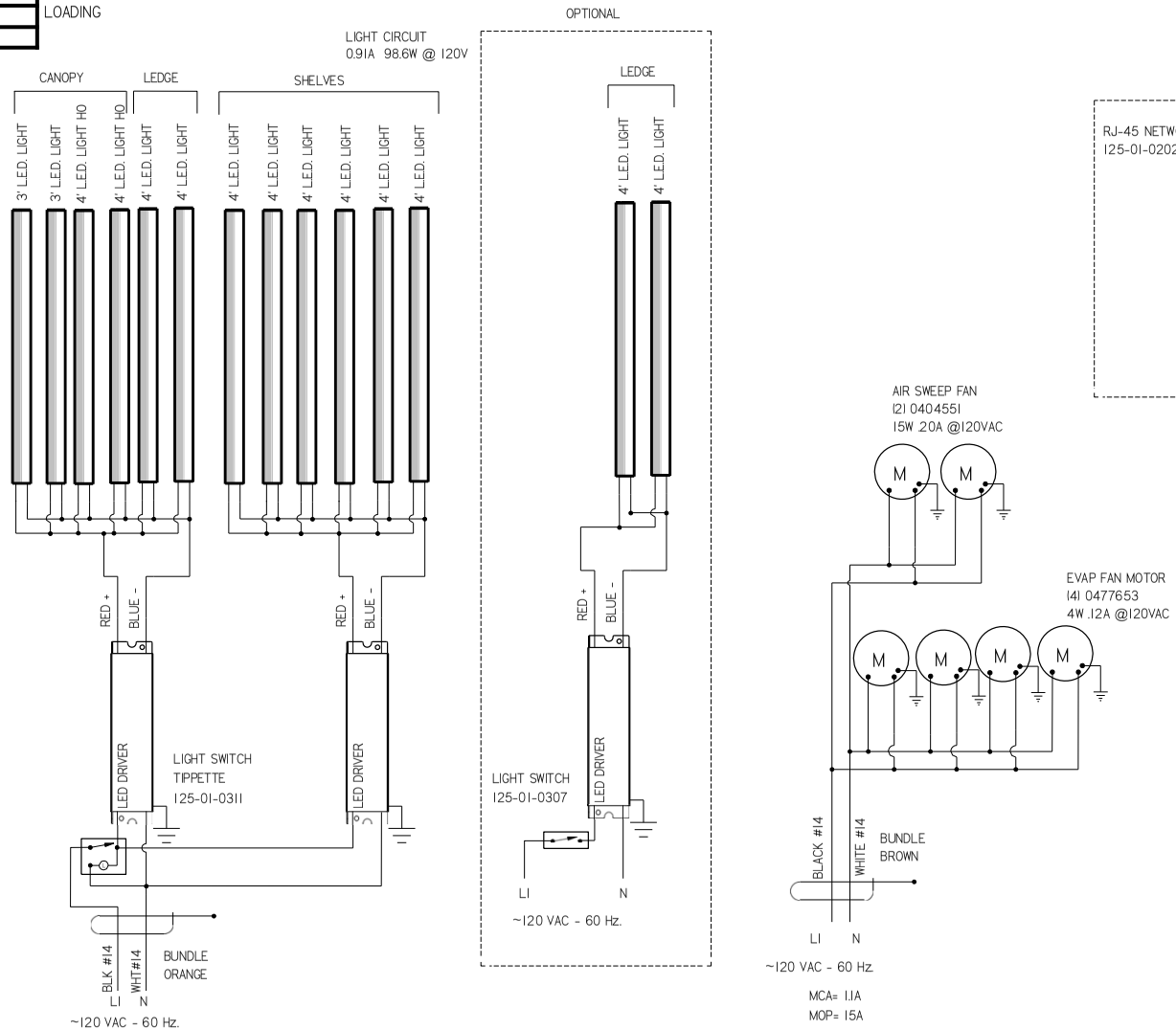

REVISION HISTORY						
REV	ECN	DATE	REVISION DESCRIPTION	REV BY	CHKD BY	APPR BY
A	ECN-CAP-0011187	2018/02/01	RELEASED TO PRODUCTION	CB	CB	CB
B	ECN-CAP-0011188	2018/02/02	REMOVED AIR SWEEP HEATER	CB	CB	CB
C	ECN-CAP-0011190	2018/02/09	ADDED FIELD INSTRUCTIONS	CB	CB	CB
D	ECN-CAP-0011191	2018/02/14	ADDED ADDITIONAL FIELD INSTRUCTIONS	CB	CB	CB
E	ECN-CAP-0021400	2020/04/22	ADDED LEDGE LIGHT OPTION	CB	CB	CB
F	ECN-COD-0014496	2021/08/20	RE-LABELED PROBE ON PAGE-2	CB	CB	CB

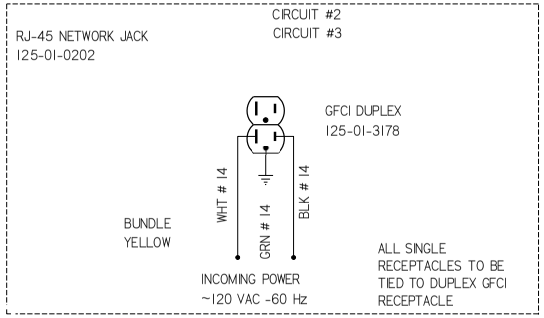

NOTES:
CASE MUST BE GROUNDED
WHEN PASSING WIRES THROUGH METAL HOLES A GROMMET MUST BE USED

MATERIAL - N/A	
DATE DRAWN - 2-1-18	
DRAWN BY -CRAIG BOOREY	ECN-CAP-0011187
REVIEWED BY -CRAIG BOOREY	REF -
APPROVED BY - CRAIG BOOREY	SHEET 1 OF 3
UNLESS OTHERWISE SPECIFIED DIMENSIONS ARE IN INCHES.	
TOLERANCES ARE: DECIMALS .XX ±.03, .XXX ±.010 ANGLES ± 2°	THIRD ANGLE PROJECTION

HUSSMANN®

DIAGRAM-03-MV-BC-8R
W/AK-CC-210 FOR /MISTING
SYSTEM

3055096 | F

HUSSMANN_COF_11 SHEET SIZE D

REVISION HISTORY						
REV	ECN	DATE	REVISION DESCRIPTION	REV BY	CHKD BY	APPR BY
A	ECN-CAP-0011187	2018/02/01	RELEASED TO PRODUCTION	CB	CB	CB
B	ECN-CAP-0011188	2018/02/02	REMOVED AIR SWEEP HEATER	CB	CB	CB
C	ECN-CAP-0011190	2018/02/09	ADDED FIELD INSTRUCTIONS	CB	CB	CB
D	ECN-CAP-0011191	2018/02/14	ADDED ADDITIONAL FIELD INSTRUCTIONS	CB	CB	CB
E	ECN-CAP-0021400	2020/04/22	ADDED LEDGE LIGHT OPTION	CB	CB	CB
F	ECN-COD-0014496	2021/08/20	RETURN AIR HEATER WAS ADDED TO PRIMARY CASE-2	CB	CB	CB

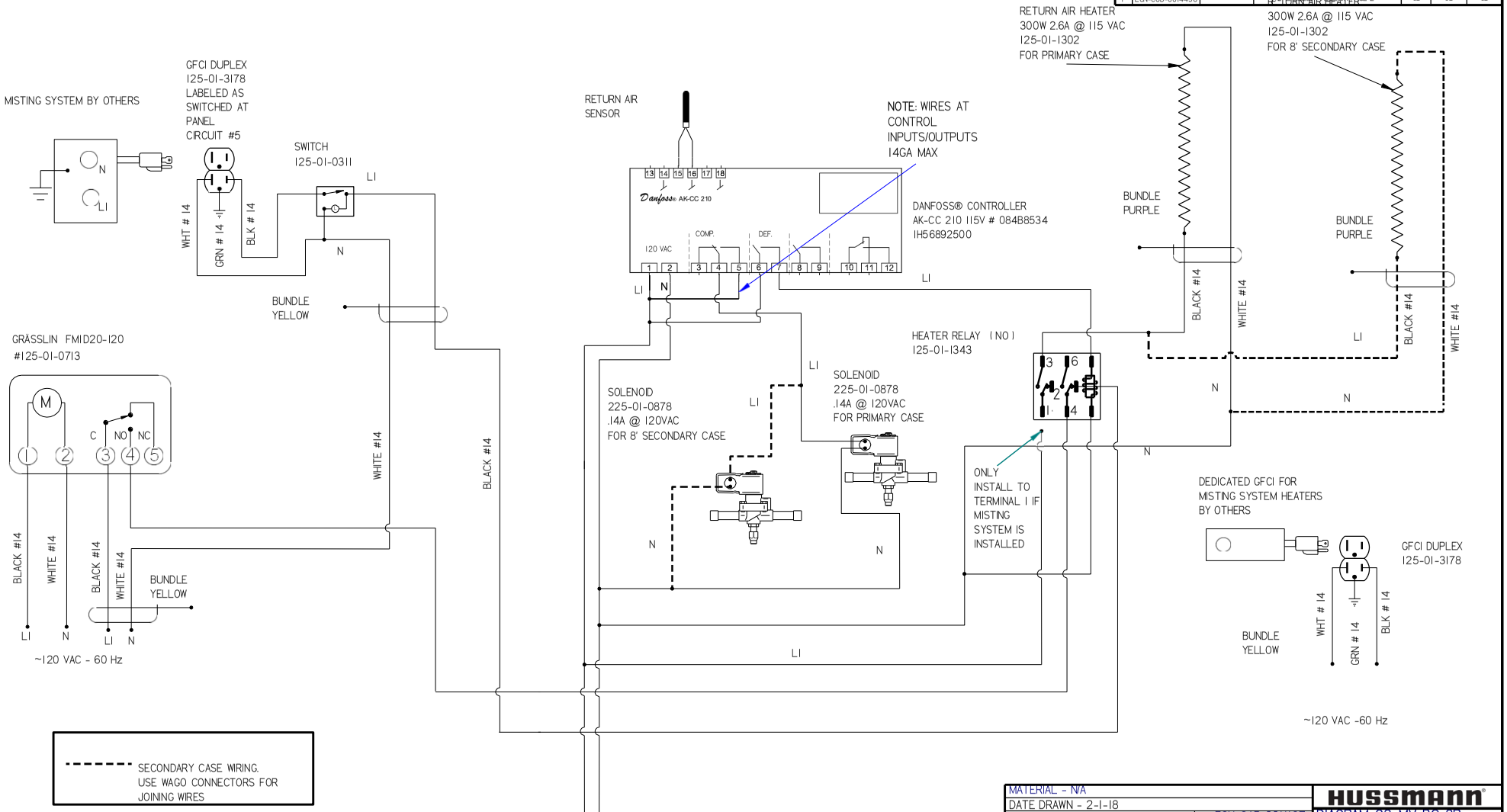

NOTES:
CASE MUST BE GROUNDED
WHEN PASSING WIRES THROUGH METAL HOLES A GROMMET MUST BE USED

MATERIAL - N/A	
DATE DRAWN - 2-1-18	
DRAWN BY -CRAIG BOOREY	ECN-CAP-0011187
REVIEWED BY -CRAIG BOOREY	REF -
APPROVED BY - CRAIG BOOREY	SHEET 2 OF 3

UNLESS OTHERWISE SPECIFIED DIMENSIONS ARE IN INCHES.
TOLERANCES ARE:
DECIMALS .XX ±.03, .XXX ±.010
ANGLES ± 2°
THIRD ANGLE PROJECTION

HUSSMANN®
DIAGRAM-03-MV-BC-8R
W/AK-CC-210 FOR /MISTING
SYSTEM

3055096 | F

HUSSMANN_CDF_L1 SHEET SIZE D

REVISION HISTORY						
REV	ECN	DATE	REVISION DESCRIPTION	REV BY	CHKD BY	APPR BY
A	ECN-CAP-0011187	2018/02/01	RELEASED TO PRODUCTION	CB	CB	CB
B	ECN-CAP-0011188	2018/02/02	REMOVED AIR SWEEP HEATER	CB	CB	CB
C	ECN-CAP-0011190	2018/02/09	ADDED FIELD INSTRUCTIONS	CB	CB	CB
D	ECN-CAP-0011191	2018/02/14	ADDED ADDITIONAL FIELD INSTRUCTIONS	CB	CB	CB
E	ECN-CAP-0021400	2020/04/22	ADDED LEDGE LIGHT OPTION	CB	CB	CB
F	ECN-COD-0014496	2021/08/20	RE-LABELED PROBE ON PAGE-2	CB	CB	CB

8' PRIMARY CASE

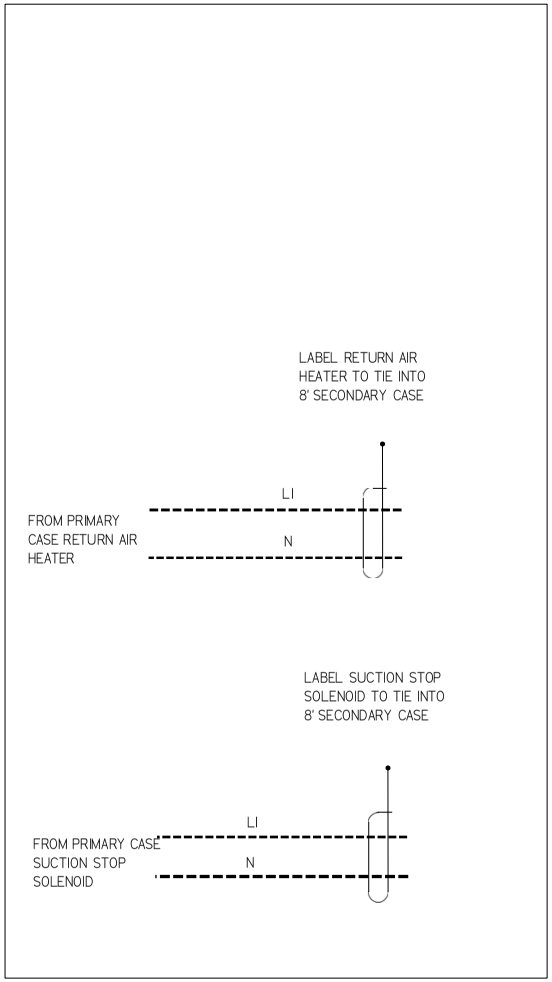

LEADS TERMINATED IN RACEWAY FOR BOTH CASES TO BE FIELD CONNECTED

8' SECONDARY CASE

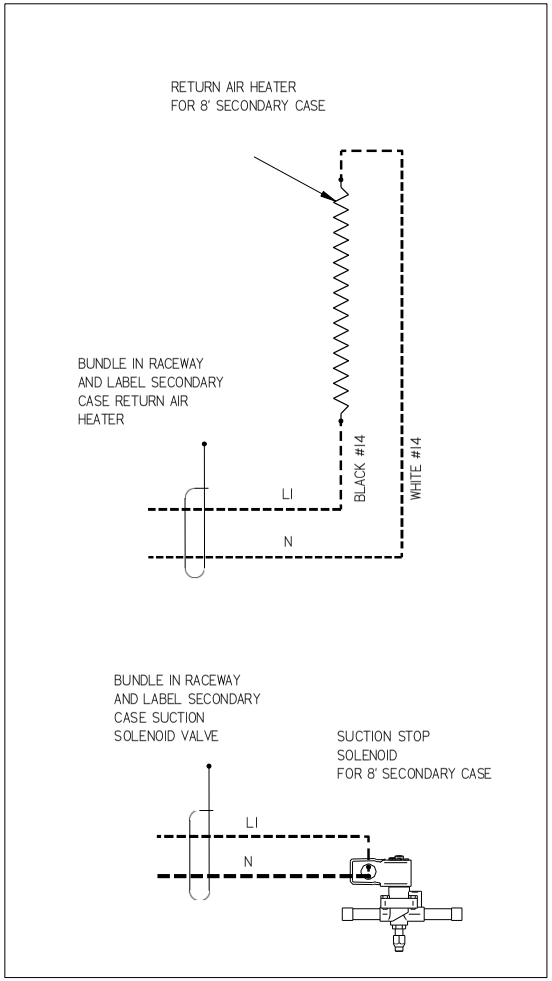

NOTES:
CASE MUST BE GROUNDED
WHEN PASSING WIRES THROUGH METAL HOLES A GROMMET MUST BE USED

MATERIAL - N/A	
DATE DRAWN - 2-1-18	
DRAWN BY -CRAIG BOOREY	ECN-CAP-0011187
REVIEWED BY -CRAIG BOOREY	REF -
APPROVED BY - CRAIG BOOREY	SHEET 3 OF 3
UNLESS OTHERWISE SPECIFIED DIMENSIONS ARE IN INCHES.	
TOLERANCES ARE: DECIMALS .XX ±.03, .XXX ±.010 ANGLES ± 2°	THIRD ANGLE PROJECTION

HUSSMANN®

DIAGRAM-03-MV-BC-8R W/AK-CC-210 FOR /MISTING SYSTEM

3055096 | F

HUSSMANN_COF_11 SHEET SIZE D

REVISION HISTORY						
REV	ECN	DATE	REVISION DESCRIPTION	REV BY	CHKD BY	APPR BY
A	ECN-CAP-0021390	3-12-20	RELEASED TO PRODUCTION	CB	CB	CB
B	ECN-COD-0014496	8-20-21	REVISED PROBE ON PAGE-2	CB	CB	CB

CIRCUIT #1
LOADING

	120V	
L1	2.0	

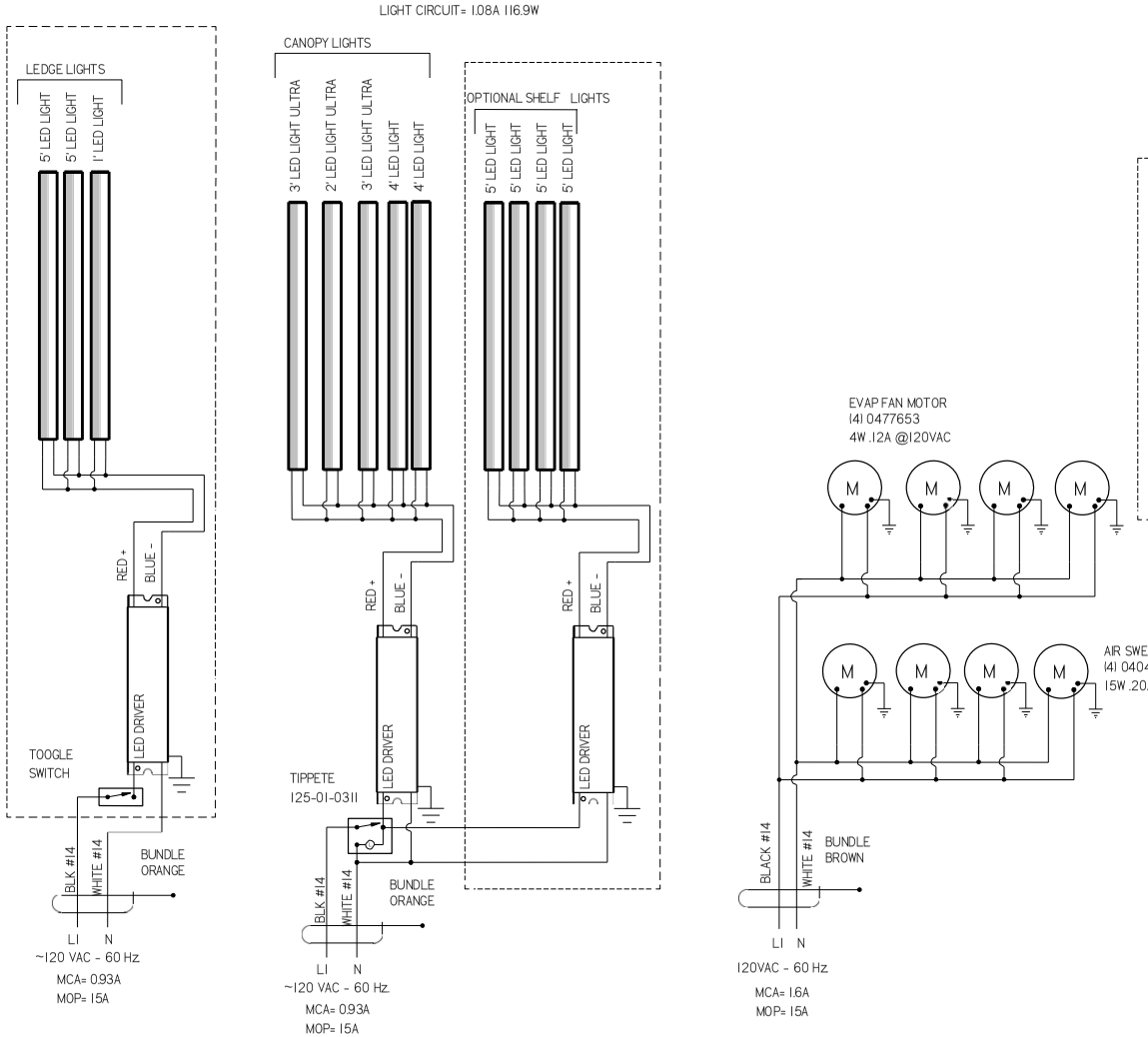

CIRCUIT # 2 (optional)

	LOADING	
	120 V	
L1	15.0	

NOTE FOR GFCI PROTECTION: IF MORE THAN ONE SINGLE RECEPTACLE IS USED IN CONJUNCTION WITH A GFCI DUPLEX RECEPTACLE "DOWNSTREAM" ON THE LOAD SIDE, THE SUM OF ALL RECEPTACLES SHOULD NOT BE MORE THAN 15A

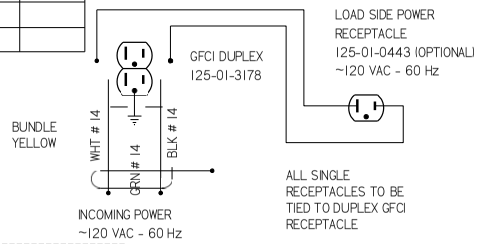

NOTES:
1. PRINTED DOCUMENT REQUIRED SETTING: ALL COLORS BLACK & WHITE
2. CASE & ANY REMOVABLE PANEL WITH ELECTRICAL PARTS MUST BE GROUNDED.
3. WHEN PASSING WIRES THROUGH METAL HOLES A GROMMET MUST BE USED

UL COLOR CODES / ABBREVIATIONS

- RED = RD
- BLACK = BK
- BLUE = BL
- YELLOW = YL
- GRAY = GY
- WHITE = WT
- GREEN = GN
- BROWN = BN
- ORANGE = OR
- VIOLET = VT

FACTORY 14GA WIRE
FACTORY 10GA WIRE
FIELD WIRE

DO NOT SCALE DRAWING
SHEET 1 OF 2

HUSSMANN®
DIAGRAM-Q3-MV-BC- 10R W/AK-CC-210 / MISTING SYSTEM
3120441
REV B

CNO_10 WIRE DIAGRAM SIZE C

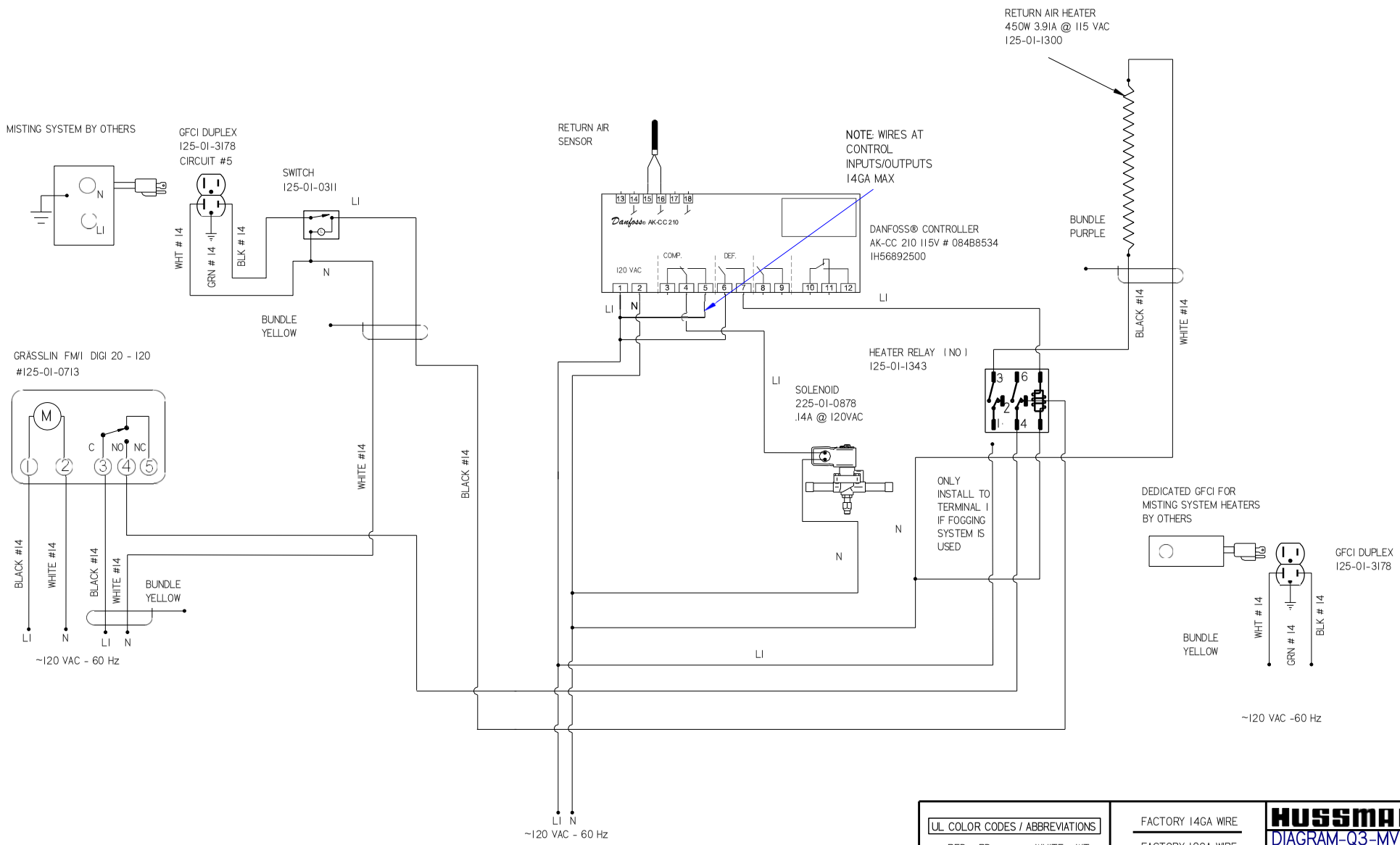

NOTES:
1. PRINTED DOCUMENT REQUIRED SETTING: ALL COLORS BLACK & WHITE
2. CASE & ANY REMOVABLE PANEL WITH ELECTRICAL PARTS MUST BE GROUNDED.
3. WHEN PASSING WIRES THROUGH METAL HOLES A GROMMET MUST BE USED

UL COLOR CODES / ABBREVIATIONS		FACTORY 14GA WIRE	HUSSMANN®
RED = RD	WHITE = WT	FACTORY 10GA WIRE	DIAGRAM-Q3-MV-BC- 10R W/AK-CC-210 / MISTING SYSTEM
BLACK = BK	GREEN = GN	FIELD WIRE	
BLUE = BL	BROWN = BN	DO NOT SCALE DRAWING	3120441 REV B
YELLOW =	ORANGE =	SHEET 2 OF 2	
YL GRAY = GY	OR VIOLET = VT		

CNO_10 WIRE DIAGRAM SIZE C

120V		CIRCUIT #1 LOADING
L1 6.4		

REVISION HISTORY						
REV	ECN	DATE	REVISION DESCRIPTION	REV BY	CHKD BY	APPR BY
A	ECN-CAP-0010812	2018/01/12	RELEASED TO PRODUCTION	CB	CB	CB
B	ECN-CAP-0011188	2018/02/02	REMOVED AIR SWEEP HEATER	CB	CB	CB
C	ECN-CAP-0011192	2018/02/16	ADDED ADDITIONAL FIELD INSTRUCTIONS	CB	CB	CB
D	ECN-CAP-0013269	2018/06/28	ADDED 4TH LED DRIVER	CB	CB	CB
E	ECN-CAP-0021400	2020/04/22	ADDED OPTIONAL LEDGE LIGHTS	CB	CB	CB
F	ECN-COD-0014496	2021/08/20	RE-LABELED PROBE ON PAGE-2	CB	CB	CB

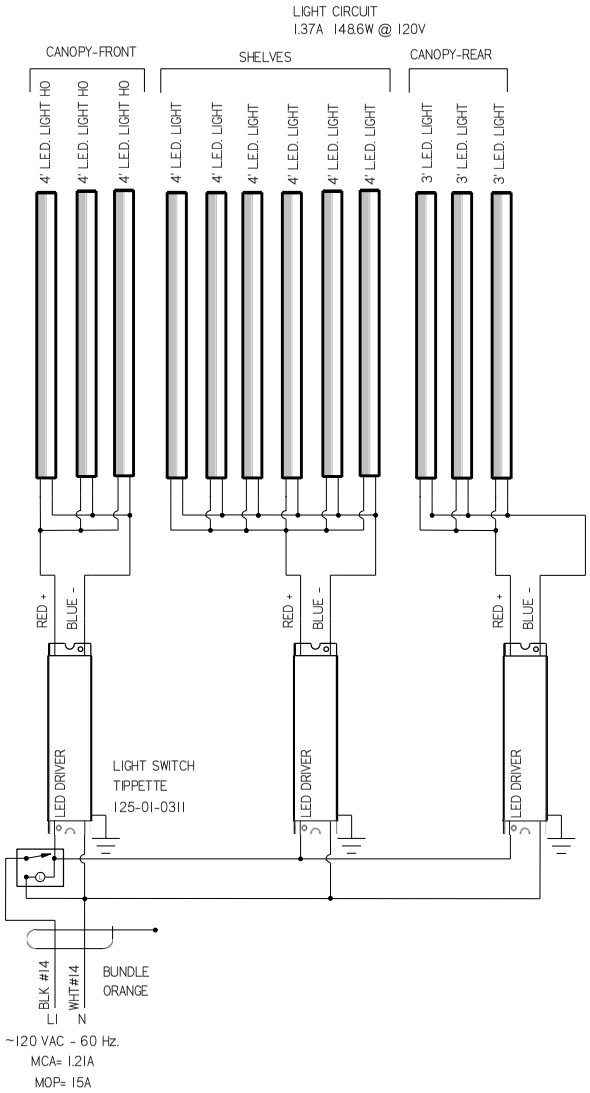

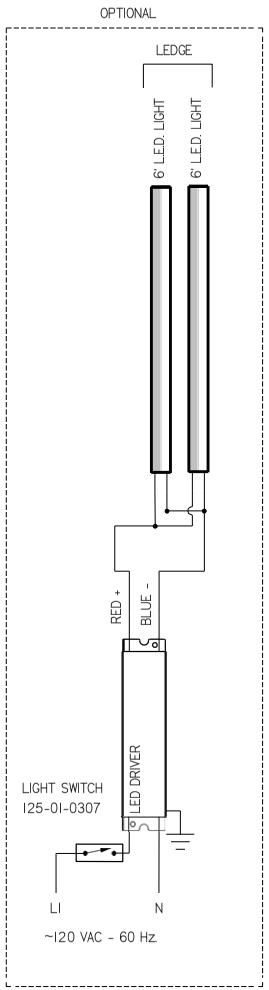

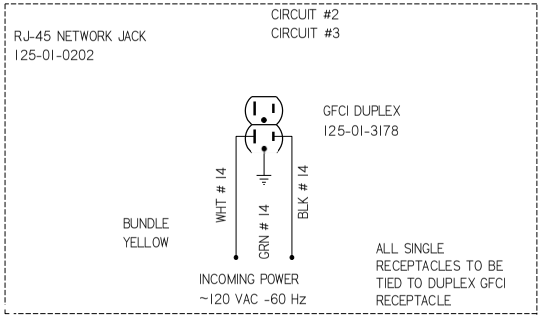

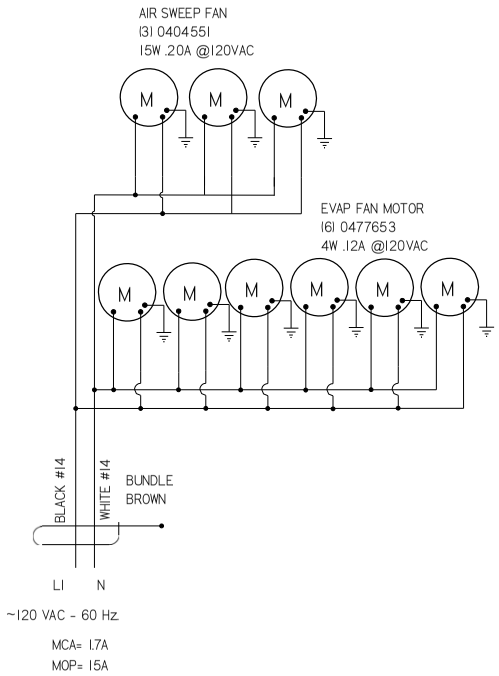

NOTES:
CASE MUST BE GROUNDED
WHEN PASSING WIRES THROUGH METAL HOLES A GROMMET MUST BE USED

MATERIAL - N/A	
DATE DRAWN - 1-12-18	
DRAWN BY -CRAIG BOOREY	ECN-CAP-0010812
REVIEWED BY -CRAIG BOOREY	REF -
APPROVED BY - CRAIG BOOREY	SHEET 1 OF 2
UNLESS OTHERWISE SPECIFIED DIMENSIONS ARE IN INCHES. TOLERANCES ARE: DECIMALS .XX ±.03, .XXX ±.010 ANGLES ± 2°	THIRD ANGLE PROJECTION

HUSSMANN®

DIAGRAM-03-MV-BC-12R W/AK-CC-210 FOR /MISTING SYSTEM

3053568 F

HUSSMANN_LOP_L1 SHEET SIZE D

REVISION HISTORY						
REV	ECN	DATE	REVISION DESCRIPTION	REV BY	CHKD BY	APPR BY
A	ECN-CAP-00108I2	2018/01/12	RELEASED TO PRODUCTION	CB	CB	CB
B	ECN-CAP-00111188	2018/02/02	REMOVED AIR SWEEP HEATER	CB	CB	CB
C	ECN-CAP-00111192	2018/02/16	ADDED ADDITIONAL FIELD INSTRUCTIONS	CB	CB	CB
D	ECN-CAP-00113269	2018/06/28	ADDED 4TH LED DRIVER	CB	CB	CB
E	ECN-CAP-0021400	2020/04/22	ADDED OPTIONAL LEDGE LIGHTS	CB	CB	CB
F	ECN-CAP-	2021/08/20	RE-LABELED PROBE ON PAGE-2	CB	CB	CB

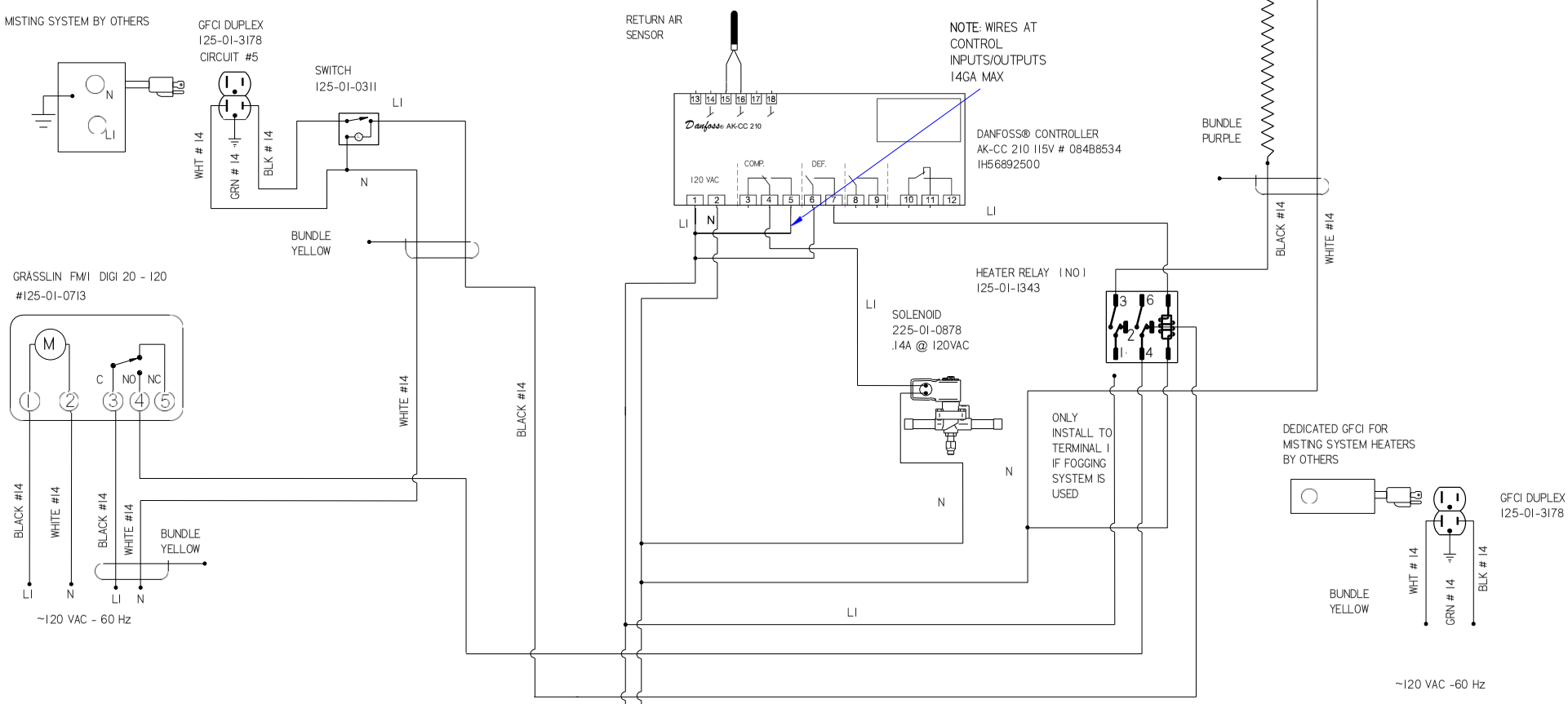

NOTES:
CASE MUST BE GROUNDED
WHEN PASSING WIRES THROUGH METAL HOLES A GROMMET MUST BE USED

MATERIAL - N/A	
DATE DRAWN - I-I2-I8	
DRAWN BY -CRAIG BOOREY	ECN-CAP-00I08I2
REVIEWED BY -CRAIG BOOREY	REF -
APPROVED BY - CRAIG BOOREY	SHEET 2 OF 2
UNLESS OTHERWISE SPECIFIED DIMENSIONS ARE IN INCHES. TOLERANCES ARE: DECIMALS .XX ±.03, .XXX ±.010 ANGLES ± 2°	THIRD ANGLE PROJECTION

HUSSMANN®

DIAGRAM-03-MV-BC-I2R
W/AK-CC-210 FOR /MISTING
SYSTEM

3053568 F

HUSSMANN_CQF_I1 SHEET SIZE D

CIRCUIT #1
LOADING

	120V	
L1	2.25	

REVISION HISTORY						
REV	ECN	DATE	REVISION DESCRIPTION	REV BY	CHKD BY	APPR BY
A	ECN-COD-0014505	10-19-21	RELEASED TO PRODUCTION	CB	CB	CB
B	ECN-COD-0015256	3-4-22	NEW LIGHTS	AL	CB	CB

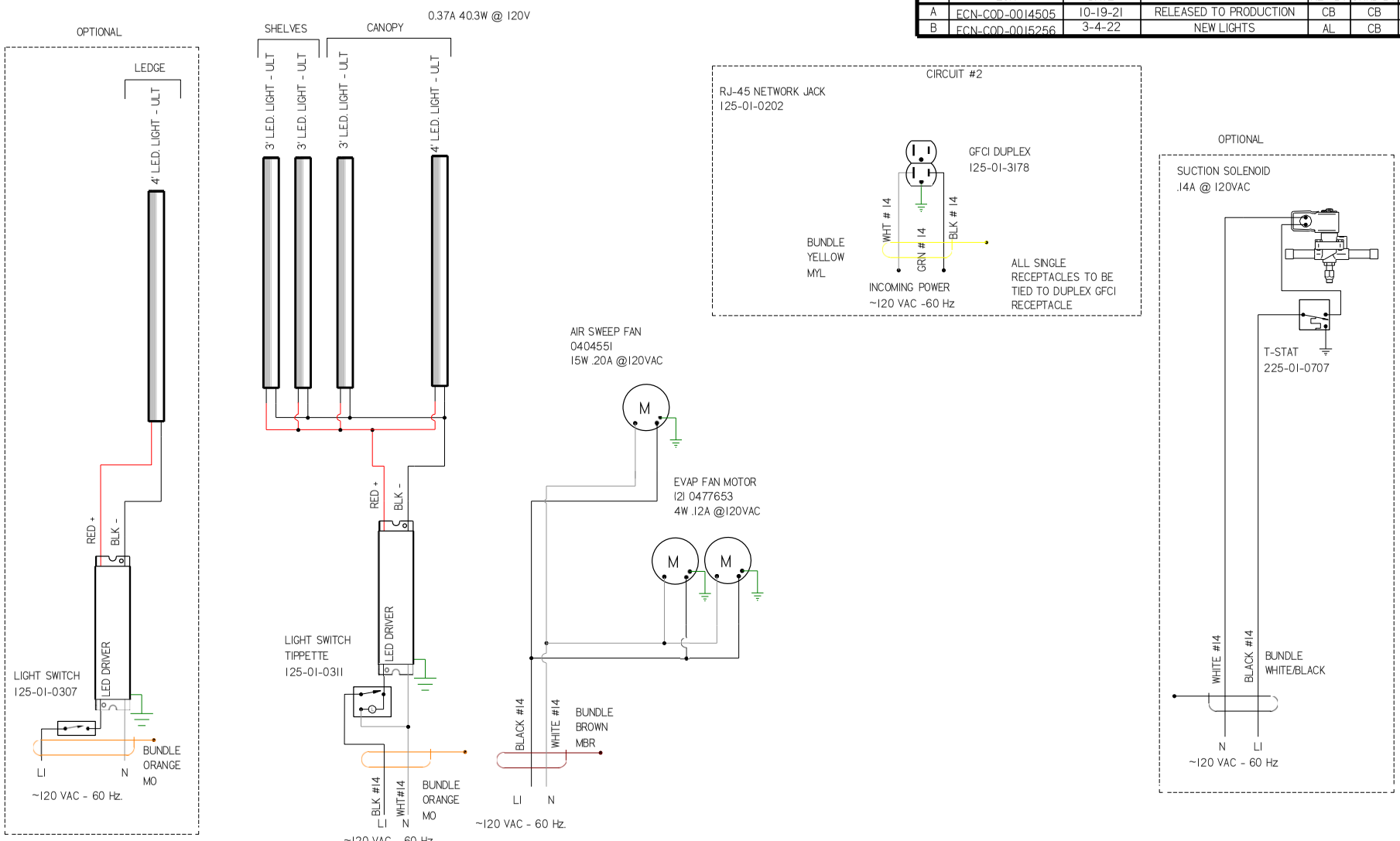

NOTES:
1. PRINTED DOCUMENT REQUIRED SETTING: ALL COLORS BLACK & WHITE
2. CASE & ANY REMOVABLE PANEL WITH ELECTRICAL PARTS MUST BE GROUNDED.
3. WHEN PASSING WIRES THROUGH METAL HOLES A GROMMET MUST BE USED

WIRE MARKER COLORS/ABBREVIATIONS	
BLACK = MBK	MAROON =
BLUE = MBL	MMR ORANGE =
BROWN = MBR	MO PINK = MPI
DARK BLUE =	PURPLE = MP
MDB GREEN = MG	RED = MR
LIGHT BLUE = MLB	YELLOW = MYL

UL COLOR CODES / ABBREVIATIONS	
RED = RD	WHITE = WT
BLACK = BK	GREEN = GN
BLUE = BL	BROWN = BN
YELLOW =	ORANGE =
YL GRAY = GY	OR VIOLET = VT

FACTORY 14GA WIRE
FACTORY 10GA WIRE
FIELD WIRE

DO NOT SCALE DRAWING
SHEET 1 OF 2

HUSSMANN®
DIAGRAM-Q3-MV-BC- 4R W/XR75 FOR MISTING SYSTEM
P/N 3156809
REV B

CNO_10 WIRE DIAGRAM SIZE C

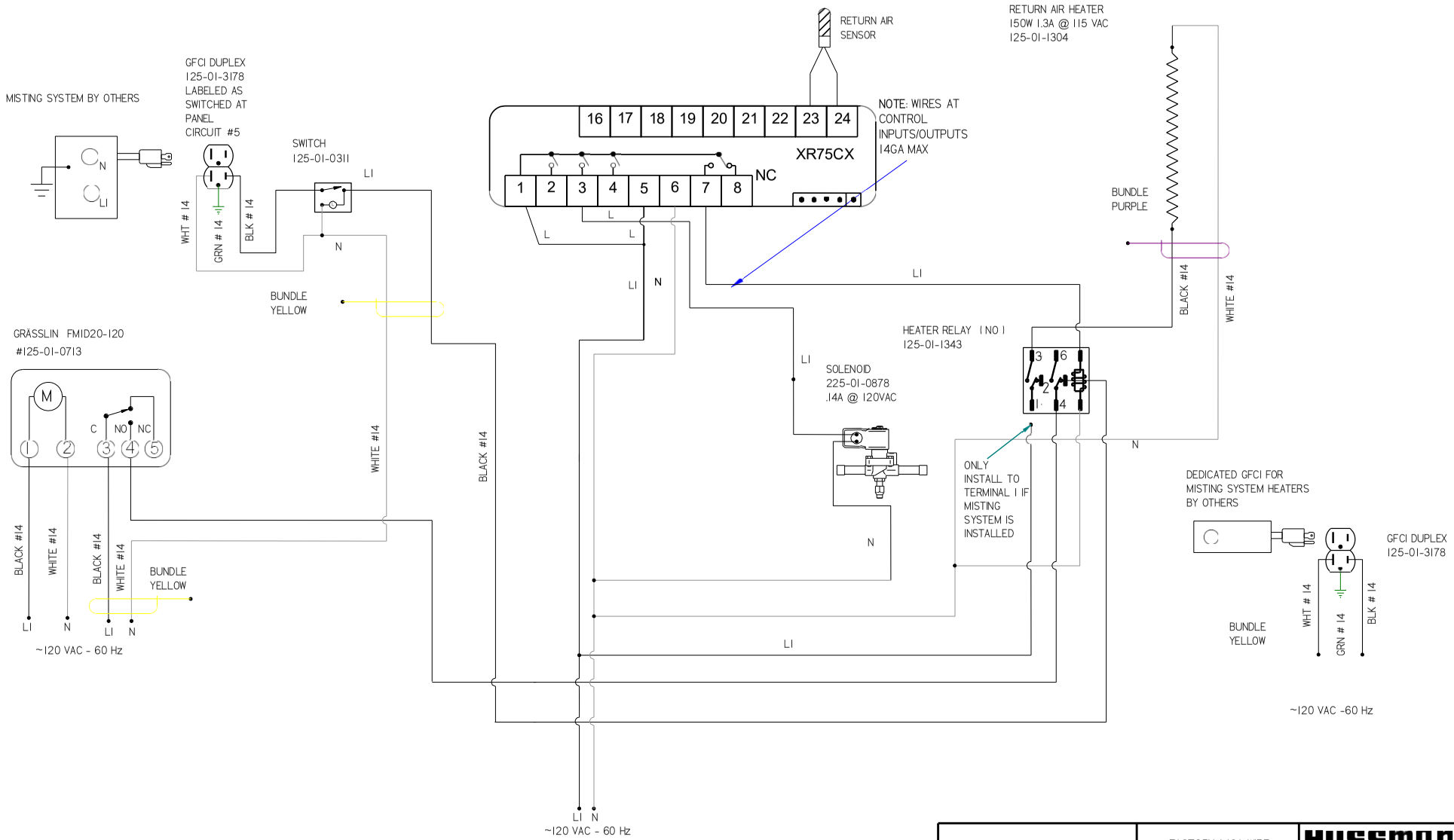

NOTES:
1. PRINTED DOCUMENT REQUIRED SETTING: ALL COLORS BLACK & WHITE
2. CASE & ANY REMOVABLE PANEL WITH ELECTRICAL PARTS MUST BE GROUNDED.
3. WHEN PASSING WIRES THROUGH METAL HOLES A GROMMET MUST BE USED

WIRE MARKER COLORS/ABBREVIATIONS	
BLACK = MBK	MAROON =
BLUE = MBL	MMR ORANGE =
BROWN = MBR	MO PINK = MPI
DARK BLUE =	PURPLE = MP
MDB GREEN = MG	RED = MR
LIGHT BLUE = MLB	YELLOW = MYL

UL COLOR CODES / ABBREVIATIONS	
RED = RD	WHITE = WT
BLACK = BK	GREEN = GN
BLUE = BL	BROWN = BN
YELLOW =	ORANGE =
YL GRAY = GY	OR VIOLET = VT

FACTORY 14GA WIRE
FACTORY 10GA WIRE
FIELD WIRE

DO NOT SCALE DRAWING
SHEET 2 OF 2

HUSSMANN®

DIAGRAM-Q3-MV-BC- 4R W/XR75 FOR MISTING SYSTEM

P/N 3156809 REV B

CNO_LO WIRE DIAGRAM SIZE C

L1	120V 4.02	

CIRCUIT #1 LOADING

REVISION HISTORY						
REV	ECN	DATE	REVISION DESCRIPTION	REV BY	CHKD BY	APPR BY
A	ECN-COD-0014505	10-19-21	RELEASED TO PRODUCTION	CB	CB	CB
B	ECN-COD-0015256	3-4-22	NEW LIGHTS	AL	CB	CB

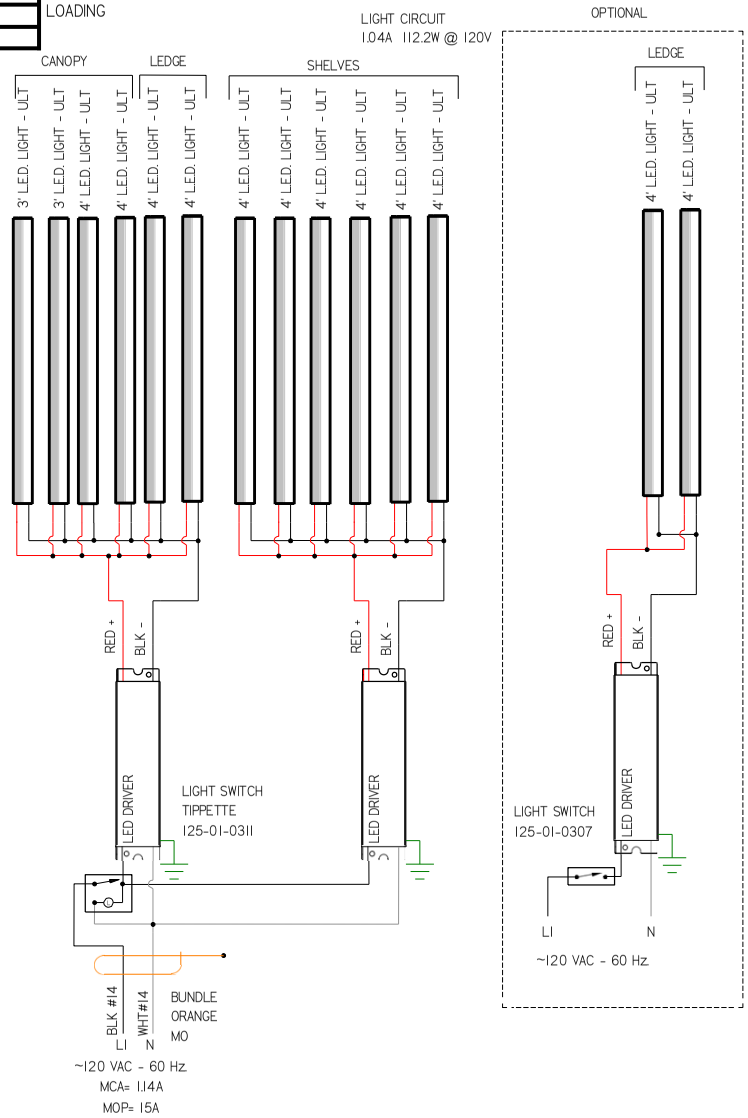

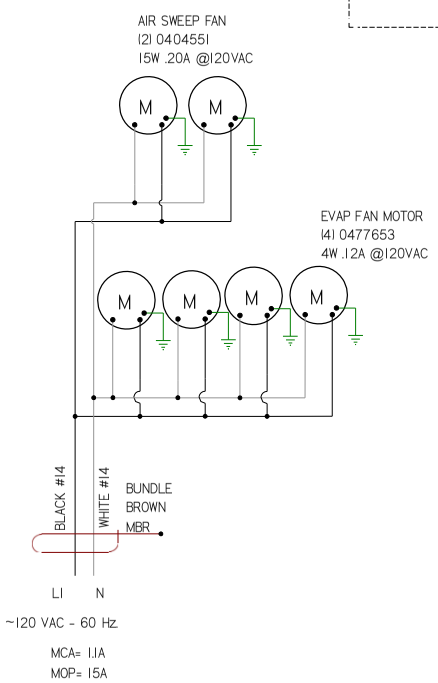

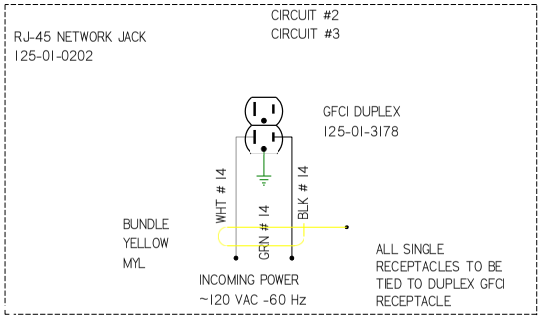

NOTES:
1. PRINTED DOCUMENT REQUIRED SETTING: ALL COLORS BLACK & WHITE
2. CASE & ANY REMOVABLE PANEL WITH ELECTRICAL PARTS MUST BE GROUNDED.
3. WHEN PASSING WIRES THROUGH METAL HOLES A GROMMET MUST BE USED

WIRE MARKER COLORS/ABBREVIATIONS	
BLACK = MBK	MAROON =
BLUE = MBL	MMR ORANGE =
BROWN = MBR	MO PINK = MPI
DARK BLUE =	PURPLE = MP
MDB GREEN = MG	RED = MR
LIGHT BLUE = MLB	YELLOW = MYL

UL COLOR CODES / ABBREVIATIONS	
RED = RD	WHITE = WT
BLACK = BK	GREEN = GN
BLUE = BL	BROWN = BN
YELLOW =	ORANGE =
YL GRAY = GY	OR VIOLET = VT

FACTORY 14GA WIRE
FACTORY 10GA WIRE
FIELD WIRE

DO NOT SCALE DRAWING
SHEET 1 OF 2

HUSSMANN®
DIAGRAM-Q3-MV-BC- 6R W/XR75 FOR MISTING SYSTEM
P/N 3156810
REV B

CNO_1.0 WIRE DIAGRAM SIZE C

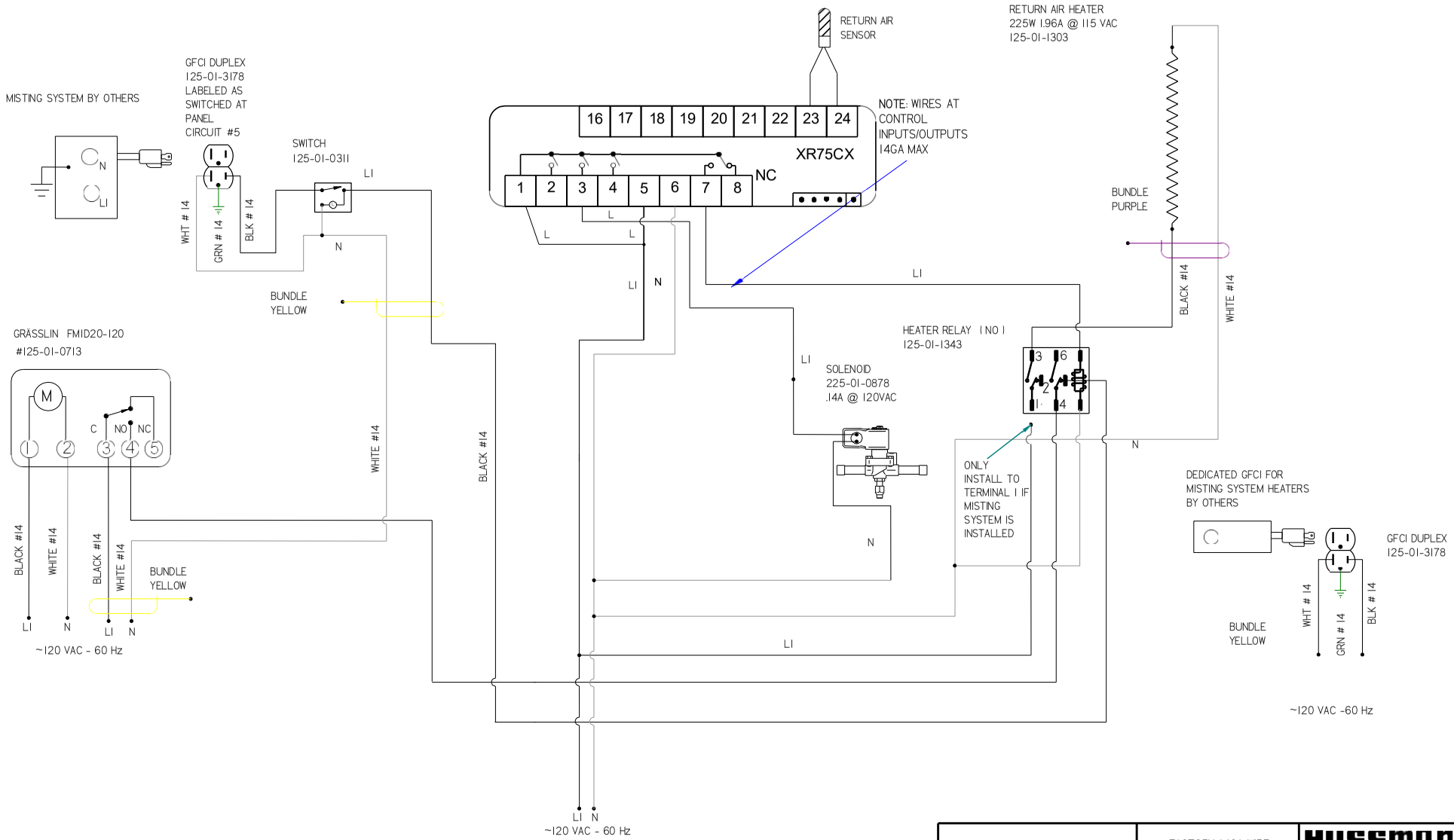

NOTES:
1. PRINTED DOCUMENT REQUIRED SETTING: ALL COLORS BLACK & WHITE
2. CASE & ANY REMOVABLE PANEL WITH ELECTRICAL PARTS MUST BE GROUNDED.
3. WHEN PASSING WIRES THROUGH METAL HOLES A GROMMET MUST BE USED

WIRE MARKER COLORS/ABBREVIATIONS	
BLACK = MBK	MAROON =
BLUE = MBL	MMR ORANGE =
BROWN = MBR	MO PINK = MPI
DARK BLUE =	PURPLE = MP
MDB GREEN = MG	RED = MR
LIGHT BLUE = MLB	YELLOW = MYL

UL COLOR CODES / ABBREVIATIONS	
RED = RD	WHITE = WT
BLACK = BK	GREEN = GN
BLUE = BL	BROWN = BN
YELLOW =	ORANGE =
YL GRAY = GY	OR VIOLET = VT

FACTORY 14GA WIRE
FACTORY 10GA WIRE
FIELD WIRE

DO NOT SCALE DRAWING
SHEET 2 OF 2

HUSSMANN®

DIAGRAM-Q3-MV-BC- 6R W/XR75 FOR MISTING SYSTEM

P/N 3156810 REV B

CNO_LO WIRE DIAGRAM SIZE C

L1	120V 4.02	

CIRCUIT #1 LOADING

REVISION HISTORY						
REV	ECN	DATE	REVISION DESCRIPTION	REV BY	CHKD BY	APPR BY
A	ECN-COD-0016099	6-28-22	RELEASED TO PRODUCTION	CB	CB	CB

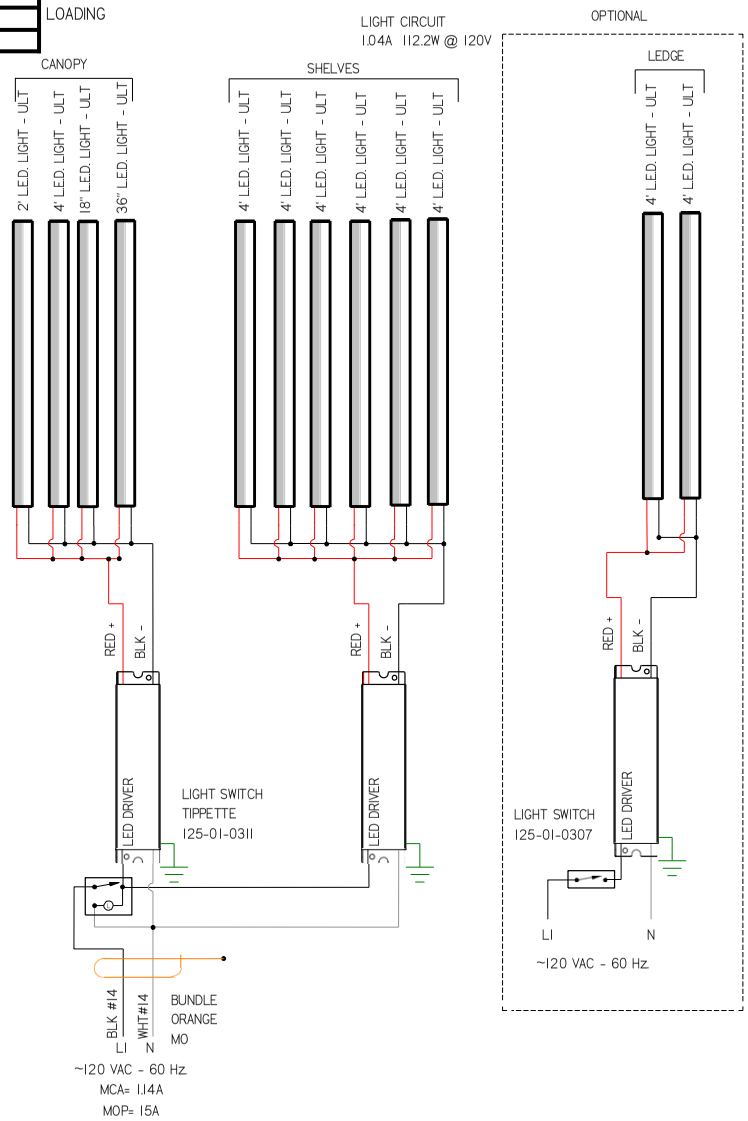

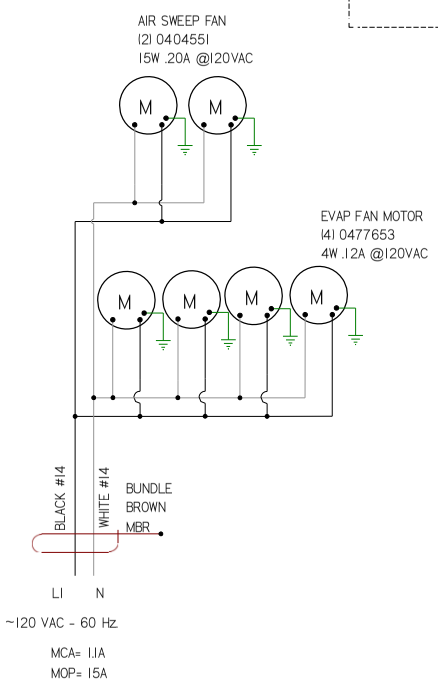

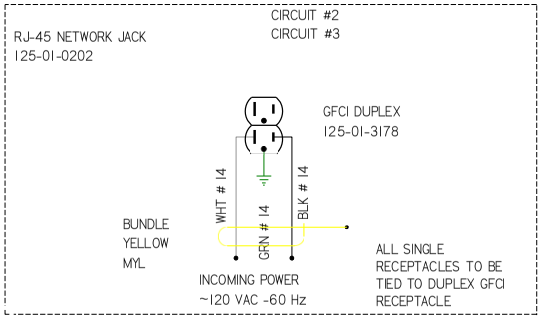

NOTES:
1. PRINTED DOCUMENT REQUIRED SETTING: ALL COLORS BLACK & WHITE
2. CASE & ANY REMOVABLE PANEL WITH ELECTRICAL PARTS MUST BE GROUNDED.
3. WHEN PASSING WIRES THROUGH METAL HOLES A GROMMET MUST BE USED

WIRE MARKER COLORS/ABBREVIATIONS	
BLACK = MBK	MAROON =
BLUE = MBL	MMR ORANGE =
BROWN = MBR	MO PINK = MPI
DARK BLUE =	PURPLE = MP
MDB GREEN = MG	RED = MR
LIGHT BLUE = MLB	YELLOW = MYL

UL COLOR CODES / ABBREVIATIONS	
RED = RD	WHITE = WT
BLACK = BK	GREEN = GN
BLUE = BL	BROWN = BN
YELLOW =	ORANGE =
YL GRAY = GY	OR VIOLET = VT

FACTORY 14GA WIRE
FACTORY 10GA WIRE
FIELD WIRE

DO NOT SCALE DRAWING
SHEET 1 OF 3

HUSSMANN®
DIAGRAM-Q3-MV-BC-6
R & 6' 2ND CASE
W/XR75 MISTING

P/N 3168545 REV A

CNO_10 WIRE DIAGRAM SIZE C

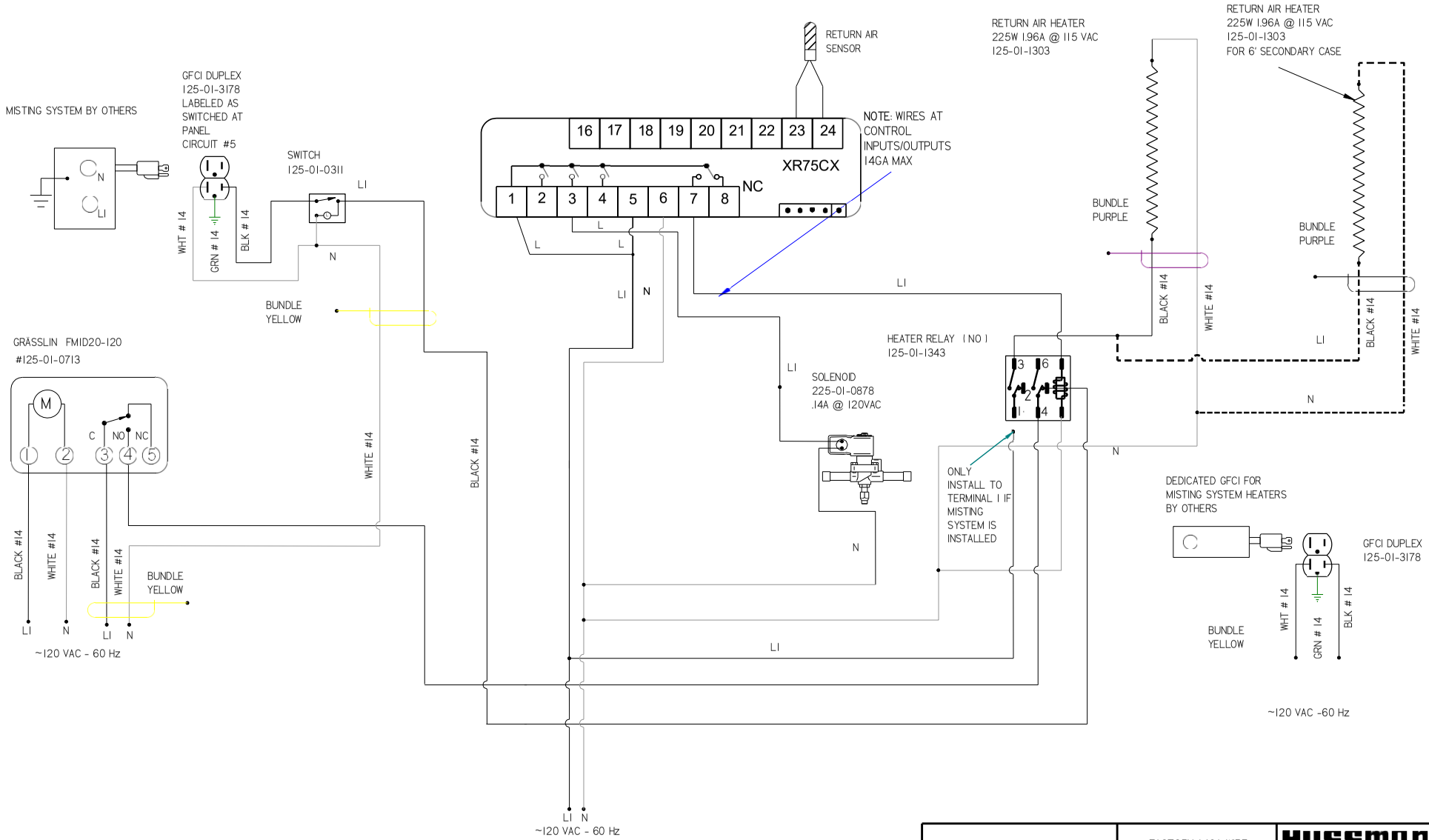

NOTES:
1. PRINTED DOCUMENT REQUIRED SETTING: ALL COLORS BLACK & WHITE
2. CASE & ANY REMOVABLE PANEL WITH ELECTRICAL PARTS MUST BE GROUNDED.
3. WHEN PASSING WIRES THROUGH METAL HOLES A GROMMET MUST BE USED

WIRE MARKER COLORS/ABBREVIATIONS	
BLACK = MBK	MAROON =
BLUE = MBL	MMR ORANGE =
BROWN = MBR	MO PINK = MPI
DARK BLUE =	PURPLE = MP
MDB GREEN = MG	RED = MR
LIGHT BLUE = MLB	YELLOW = MYL

UL COLOR CODES / ABBREVIATIONS	
RED = RD	WHITE = WT
BLACK = BK	GREEN = GN
BLUE = BL	BROWN = BN
YELLOW =	ORANGE =
YL GRAY = GY	OR VIOLET = VT

FACTORY 14GA WIRE
FACTORY 10GA WIRE
FIELD WIRE

DO NOT SCALE DRAWING
SHEET 2 OF 3

HUSSMANN®
DIAGRAM-Q3-MV-BC-6
R & 6' 2ND CASE
W/XR75 MISTING

P/N 3168545
REV A

CNO_10 WIRE DIAGRAM SIZE C

6' PRIMARY CASE

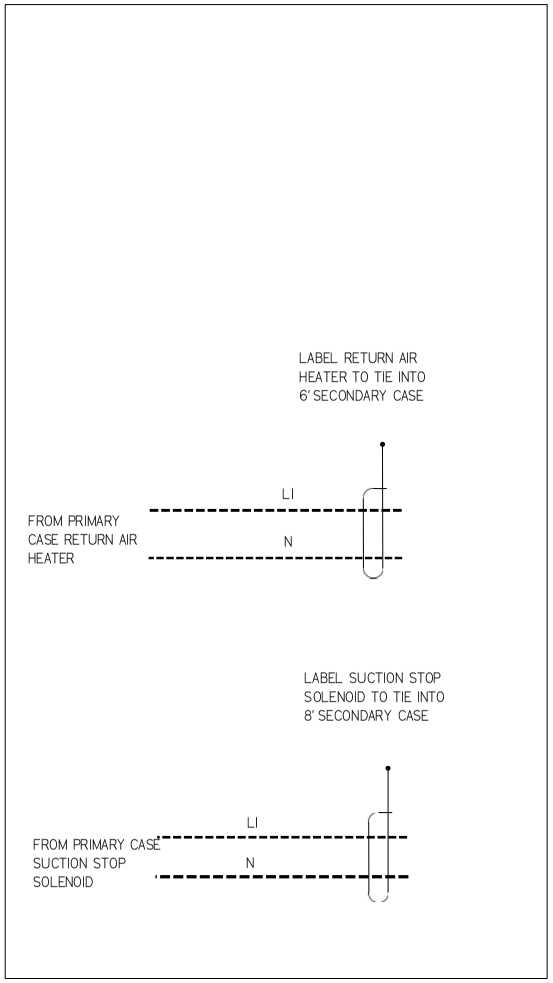

LEADS TERMINATED IN RACEWAY FOR BOTH CASES TO BE FIELD CONNECTED

6' SECONDARY CASE

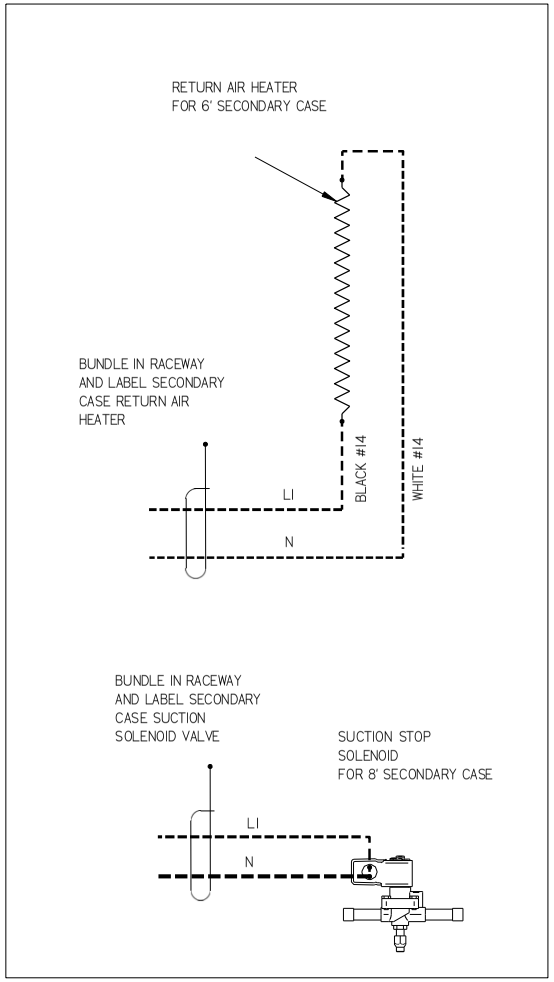

NOTES:
1. PRINTED DOCUMENT REQUIRED SETTING: ALL COLORS BLACK & WHITE
2. CASE & ANY REMOVABLE PANEL WITH ELECTRICAL PARTS MUST BE GROUNDED.
3. WHEN PASSING WIRES THROUGH METAL HOLES A GROMMET MUST BE USED

WIRE MARKER COLORS/ABBREVIATIONS	
BLACK = MBK	MAROON =
BLUE = MBL	MMR ORANGE =
BROWN = MBR	MO PINK = MPI
DARK BLUE =	PURPLE = MP
MDB GREEN = MG	RED = MR
LIGHT BLUE = MLB	YELLOW = MYL

UL COLOR CODES / ABBREVIATIONS	
RED = RD	WHITE = WT
BLACK = BK	GREEN = GN
BLUE = BL	BROWN = BN
YELLOW =	ORANGE =
YL GRAY = GY	OR VIOLET = VT

FACTORY 14GA WIRE
FACTORY 10GA WIRE
FIELD WIRE

DO NOT SCALE DRAWING
SHEET 3 OF 3

HUSSMANN®

DIAGRAM-Q3-MV-BC-6
R & 6' 2ND CASE
W/XR75 MISTING

P/N 3168545 REV A

CNO_10 WIRE DIAGRAM SIZE C

120V L1 4.7		

CIRCUIT #1 LOADING

REVISION HISTORY						
REV	ECN	DATE	REVISION DESCRIPTION	REV BY	CHKD BY	APPR BY
A	ECN-COD-0014504	10-13-21	RELEASED TO PRODUCTION	CB	CB	CB
B	ECN-COD-0015256	3-4-22	NEW LIGHTS	AL	CB	CB

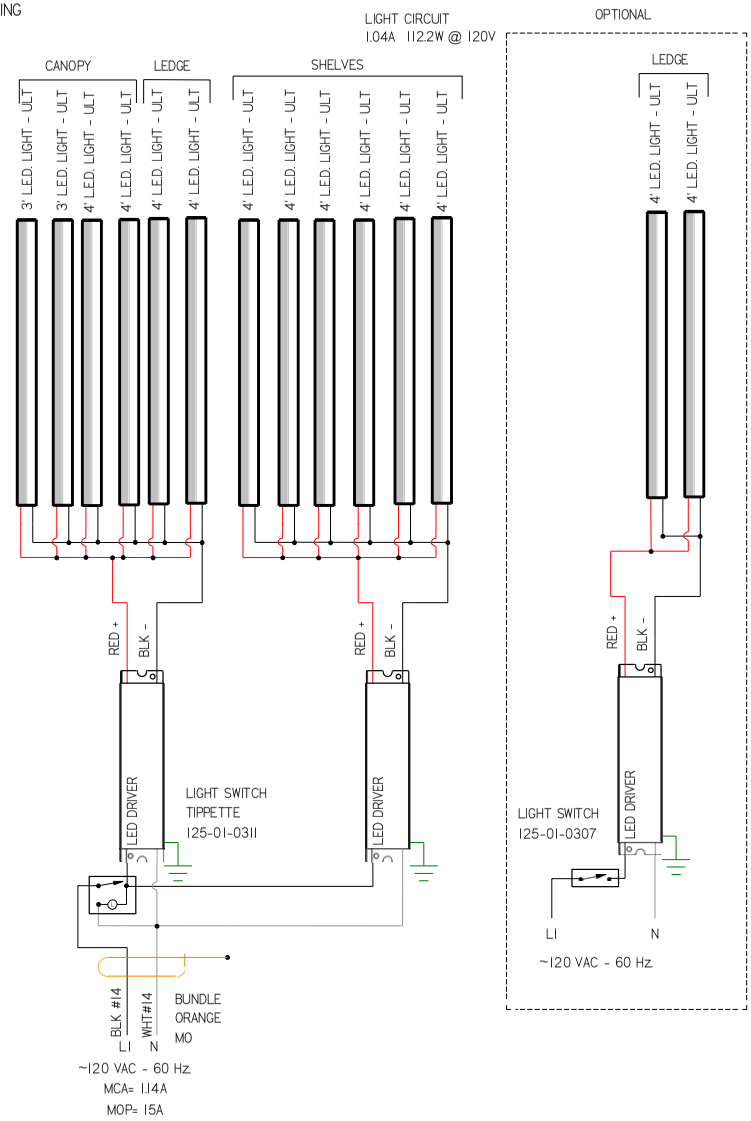

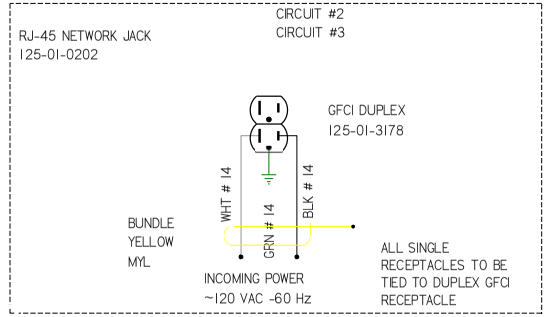

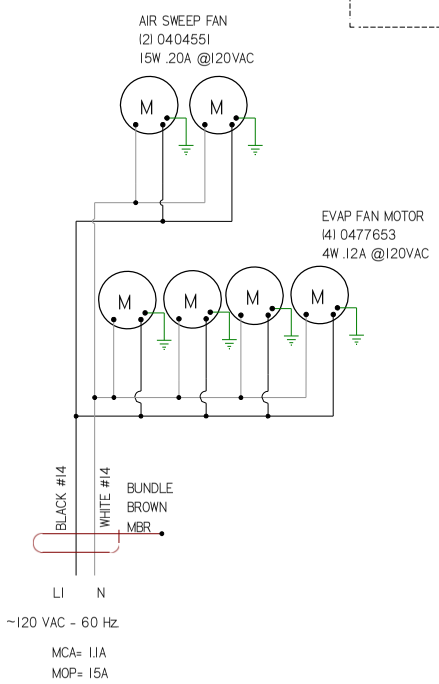

NOTES:
1. PRINTED DOCUMENT REQUIRED SETTING: ALL COLORS BLACK & WHITE
2. CASE & ANY REMOVABLE PANEL WITH ELECTRICAL PARTS MUST BE GROUNDED.
3. WHEN PASSING WIRES THROUGH METAL HOLES A GROMMET MUST BE USED

WIRE MARKER COLORS/ABBREVIATIONS	
BLACK = MBK	MAROON =
BLUE = MBL	MMR ORANGE =
BROWN = MBR	MO PINK = MPI
DARK BLUE =	PURPLE = MP
MDB GREEN = MG	RED = MR
LIGHT BLUE = MLB	YELLOW = MYL

UL COLOR CODES / ABBREVIATIONS	
RED = RD	WHITE = WT
BLACK = BK	GREEN = GN
BLUE = BL	BROWN = BN
YELLOW =	ORANGE =
YL GRAY = GY	OR VIOLET = VT

FACTORY 14GA WIRE
FACTORY 10GA WIRE
FIELD WIRE

DO NOT SCALE DRAWING
SHEET 1 OF 3

HUSSMANN®

DIAGRAM-Q3-MV-BC- 8R W/XR75 FOR MISTING SYSTEM

P/N 3156571 REV B

CNO_1.0 WIRE DIAGRAM SIZE C

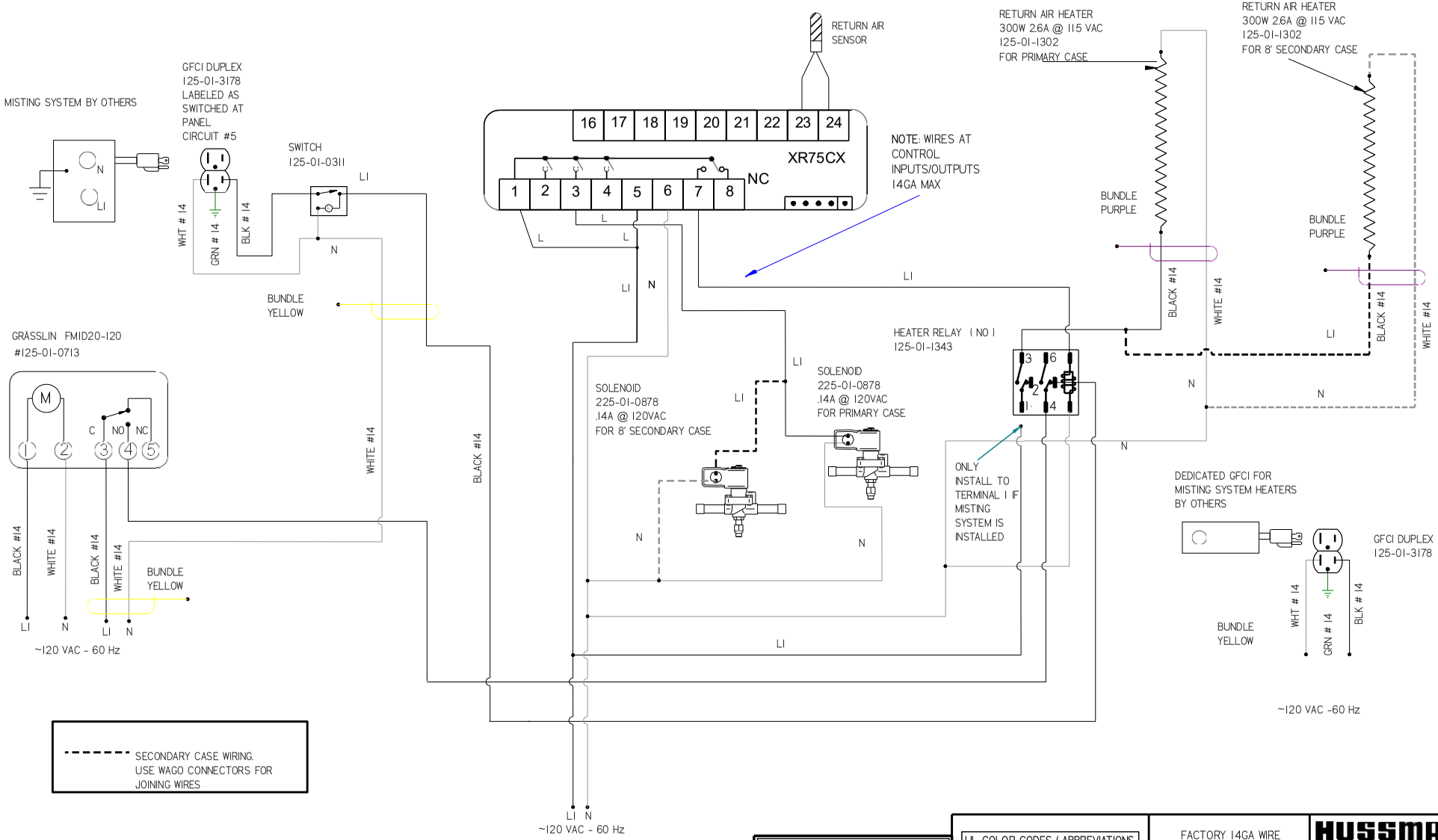

NOTES:
1. PRINTED DOCUMENT REQUIRED SETTING: ALL COLORS BLACK & WHITE
2. CASE & ANY REMOVABLE PANEL WITH ELECTRICAL PARTS MUST BE GROUNDED.
3. WHEN PASSING WIRES THROUGH METAL HOLES A GROMMET MUST BE USED

WIRE MARKER COLORS/ABBREVIATIONS	
BLACK = MBK	MAROON =
BLUE = MBL	MMR ORANGE =
BROWN = MBR	MO PINK = MPI
DARK BLUE =	PURPLE = MP
MDB GREEN = MG	RED = MR
LIGHT BLUE = MLB	YELLOW = MYL

UL COLOR CODES / ABBREVIATIONS	
RED = RD	WHITE = WT
BLACK = BK	GREEN = GN
BLUE = BL	BROWN = BN
YELLOW =	ORANGE =
YL GRAY = GY	OR VIOLET = VT

FACTORY 14GA WIRE
FACTORY 10GA WIRE
FIELD WIRE

DO NOT SCALE DRAWING
SHEET 2 OF 3

HUSSMANN®
DIAGRAM-Q3-MV-BC- 8R W/XR75 FOR MISTING SYSTEM
P/N 3156571
REV B

CNO_10 WIRE DIAGRAM SIZE C

8' PRIMARY CASE

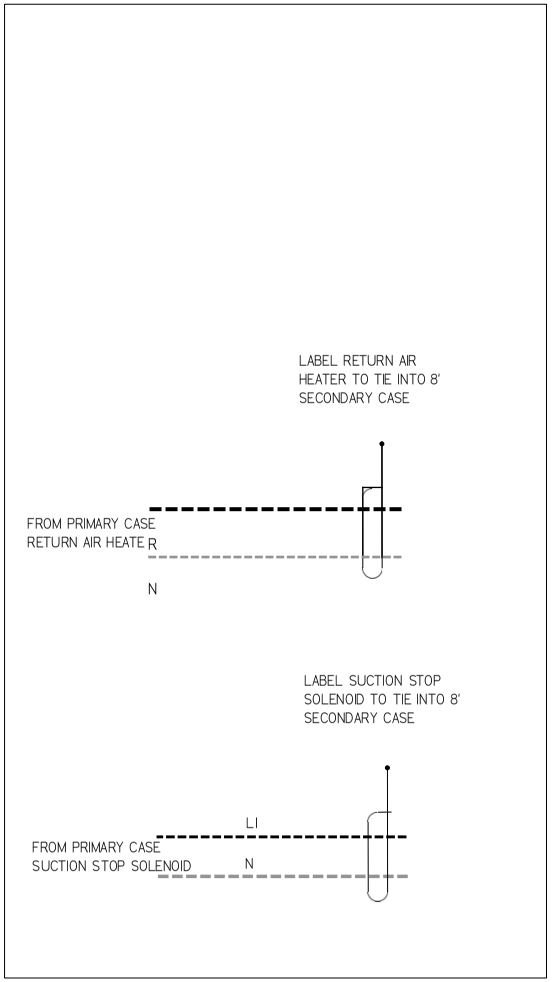

LEADS TERMINATED IN RACEWAY FOR BOTH CASES TO BE FIELD CONNECTED

8' SECONDARY CASE

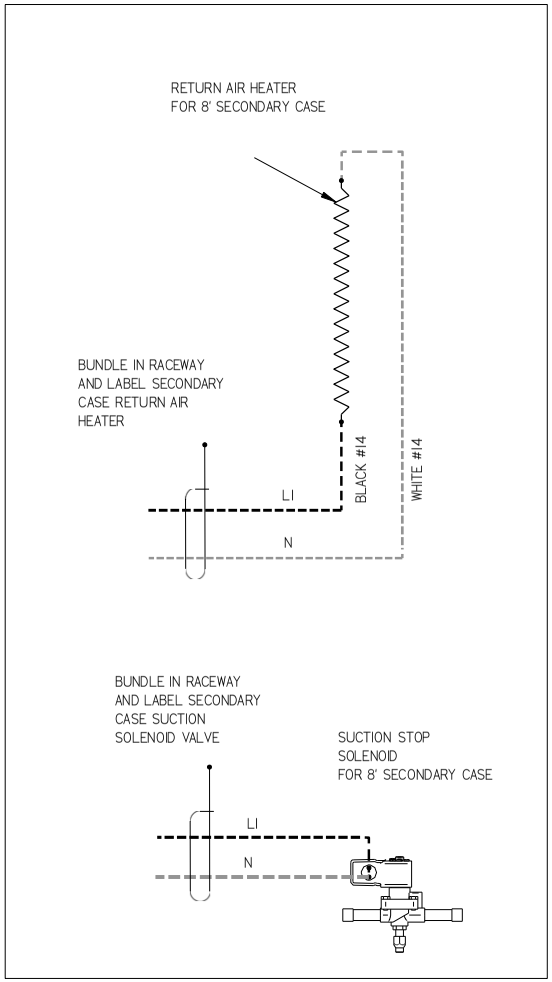

NOTES:
1. PRINTED DOCUMENT REQUIRED SETTING: ALL COLORS BLACK & WHITE
2. CASE & ANY REMOVABLE PANEL WITH ELECTRICAL PARTS MUST BE GROUNDED.
3. WHEN PASSING WIRES THROUGH METAL HOLES A GROMMET MUST BE USED

WIRE MARKER COLORS/ABBREVIATIONS	
BLACK = MBK	MAROON =
BLUE = MBL	MMR ORANGE =
BROWN = MBR	MO PINK = MPI
DARK BLUE =	PURPLE = MP
MDB GREEN = MG	RED = MR
LIGHT BLUE = MLB	YELLOW = MYL

UL COLOR CODES / ABBREVIATIONS	
RED = RD	WHITE = WT
BLACK = BK	GREEN = GN
BLUE = BL	BROWN = BN
YELLOW =	ORANGE =
YL GRAY = GY	OR VIOLET = VT

FACTORY 14GA WIRE

FACTORY 10GA WIRE

FIELD WIRE

DO NOT SCALE DRAWING

SHEET 3 OF 3

HUSSMANN®

DIAGRAM-Q3-MV-BC- 8R W/XR75 FOR MISTING SYSTEM

P/N 3156571

REV B

CNO-10 WIRE DIAGRAM SIZE C

L1	120V 6.74	

CIRCUIT #1 LOADING

REVISION HISTORY						
REV	ECN	DATE	REVISION DESCRIPTION	REV BY	CHKD BY	APPR BY
A	ECN-COD-0014504	10-13-21	RELEASED TO PRODUCTION	CB	CB	CB
B	ECN-COD-0015256	3-4-22	NEW LIGHTS	AL	CB	CB

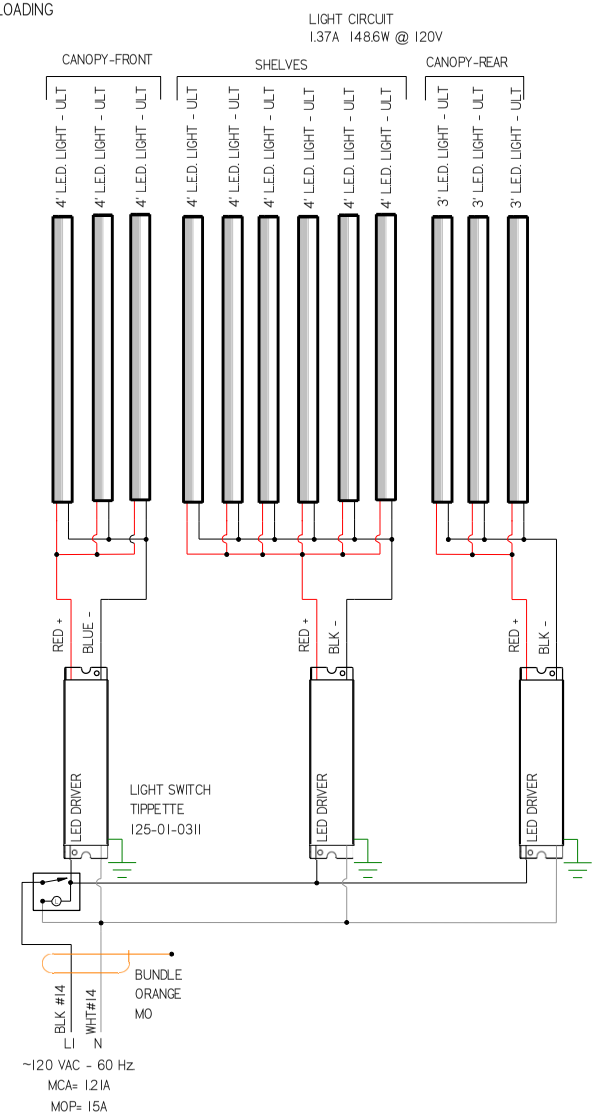

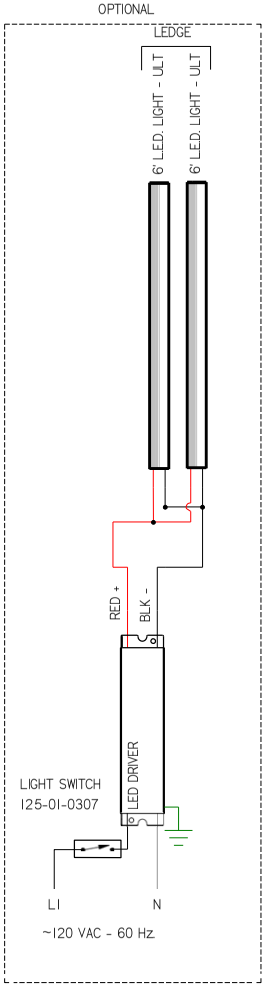

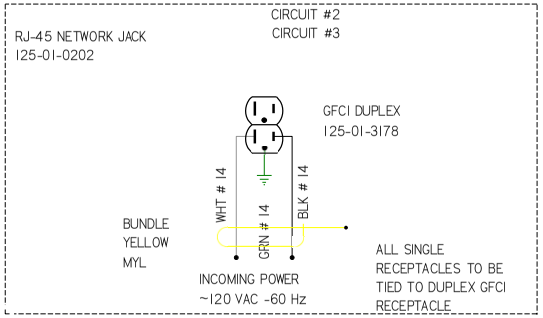

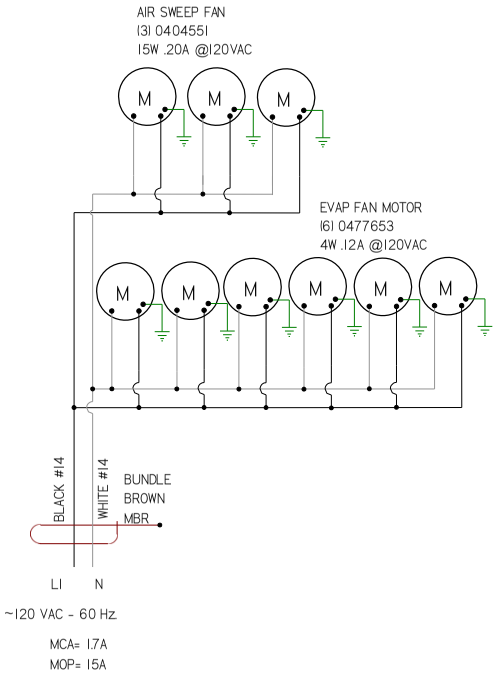

NOTES:
1. PRINTED DOCUMENT REQUIRED SETTING: ALL COLORS BLACK & WHITE
2. CASE & ANY REMOVABLE PANEL WITH ELECTRICAL PARTS MUST BE GROUNDED.
3. WHEN PASSING WIRES THROUGH METAL HOLES A GROMMET MUST BE USED

WIRE MARKER COLORS/ABBREVIATIONS	
BLACK = MBK	MAROON =
BLUE = MBL	MMR ORANGE =
BROWN = MBR	MO PINK = MPI
DARK BLUE =	PURPLE = MP
MDB GREEN = MG	RED = MR
LIGHT BLUE = MLB	YELLOW = MYL

UL COLOR CODES / ABBREVIATIONS	
RED = RD	WHITE = WT
BLACK = BK	GREEN = GN
BLUE = BL	BROWN = BN
YELLOW =	ORANGE =
YL GRAY = GY	OR VIOLET = VT

FACTORY 14GA WIRE
FACTORY 10GA WIRE
FIELD WIRE

DO NOT SCALE DRAWING
SHEET 1 OF 2

HUSSMANN®
DIAGRAM-Q3-MV-BC- 12R W/XR75 FOR MISTING SYSTEM
P/N 3156573
REV B

CNO_LO WIRE DIAGRAM SIZE C

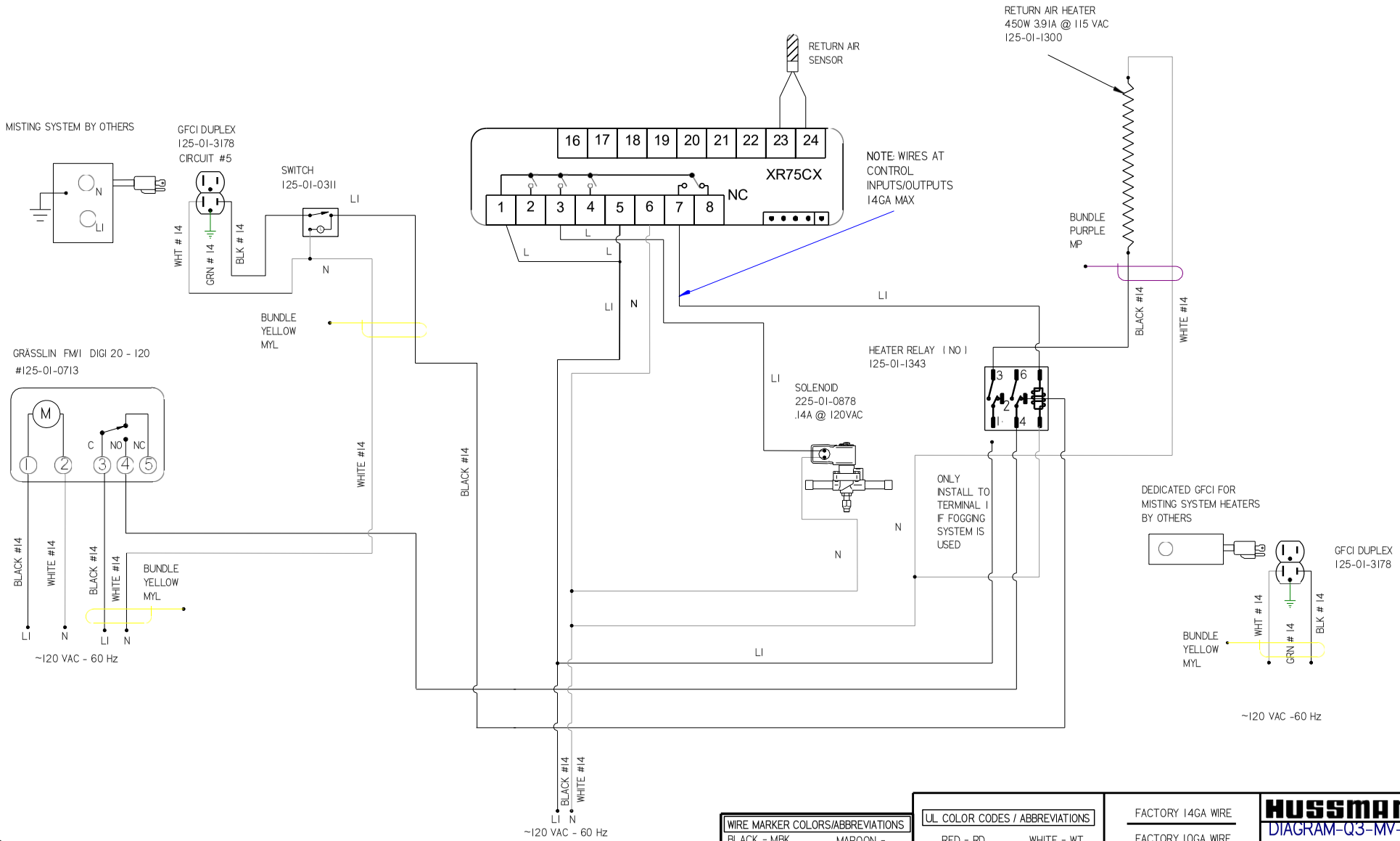

NOTES:
1. PRINTED DOCUMENT REQUIRED SETTING: ALL COLORS BLACK & WHITE
2. CASE & ANY REMOVABLE PANEL WITH ELECTRICAL PARTS MUST BE GROUNDED.
3. WHEN PASSING WIRES THROUGH METAL HOLES A GROMMET MUST BE USED

WIRE MARKER COLORS/ABBREVIATIONS	
BLACK = MBK	MAROON =
BLUE = MBL	MMR ORANGE =
BROWN = MBR	MO PINK = MPI
DARK BLUE =	PURPLE = MP
MDB GREEN = MG	RED = MR
LIGHT BLUE = MLB	YELLOW = MYL

UL COLOR CODES / ABBREVIATIONS	
RED = RD	WHITE = WT
BLACK = BK	GREEN = GN
BLUE = BL	BROWN = BN
YELLOW =	ORANGE =
YL GRAY = GY	OR VIOLET = VT

FACTORY 14GA WIRE
FACTORY 10GA WIRE
FIELD WIRE

DO NOT SCALE DRAWING
SHEET 2 OF 2

HUSSMANN®
DIAGRAM-Q3-MV-BC- 12R W/XR75 FOR MISTING SYSTEM
P/N 3156573
REV B

CNO_1.0 WIRE DIAGRAM SIZE C

SOP MIATECH FOGGING SYSTEM
Q3-MV-BC-R SETUP AND INSTALLATION

Be advised, for case lineups consisting of two 8-foot cases (or other compatible combinations), the fogger system may be shared over 2 cases to reduce cost. One case will be designated as the primary case and will house the fogger system. Any secondary case will be directly adjacent to the primary case and will share case control, fogging control and apparatus. A 12 foot case will always have a dedicated fogging system.

These are the notable differences between the primary and the secondary case.

- The primary case will house the controller (orange arrow) in the rear panel. The secondary case will not have a controller.
- The primary case will have a large removeable access panel on the lower rear skirt (blue arrow). Behind the access panel, there will be a tray to slide the fogger system into along with a set of labeled GFCIs to plug both the fogger system and the heated nozzles. The secondary case will not have an access panel, tray or GFCIs underneath the case.
- The primary case will house the system clock and heater relay behind the rear controller panel. There will be no clock or relay on the secondary case.
- The primary case will have 2 rocker switches (green arrow), one for lights, the 2nd for fogger power. The secondary case will have 1 rocker switch for lights only.

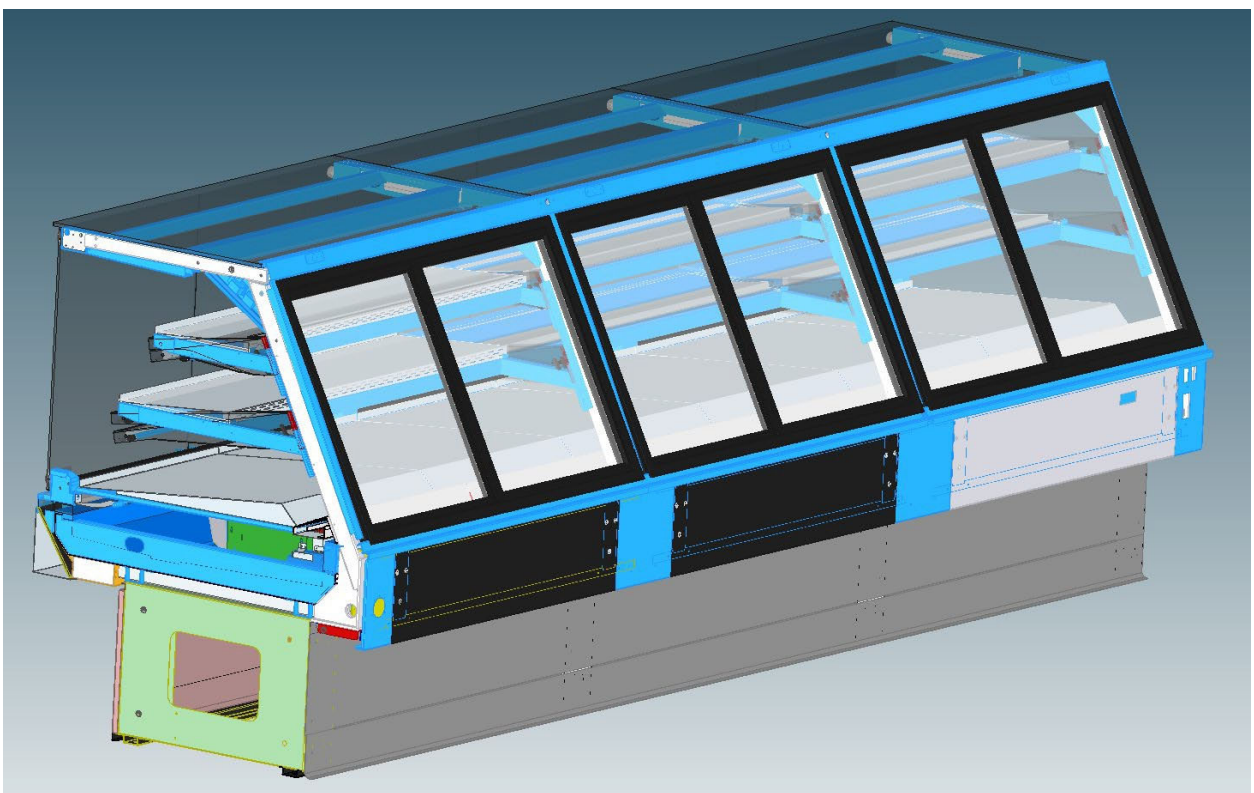

Figure 1: A 12-foot case as viewed from the rear.

1. FOGGER SYSTEM MOUNTING

a. Physical location

- Remove the upper rear skirt for access to the tray, GFCIs and case thru-hole(s).
- Connect the fogger power to the GFCI labeled “Fogging System”.

Figure 2: Rear of case showing panel cutout and access panel.

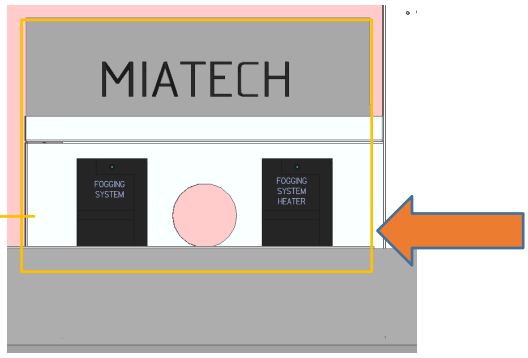

A 2-piece lower Skirt was provided for installation and access. Remove the top portion for access.

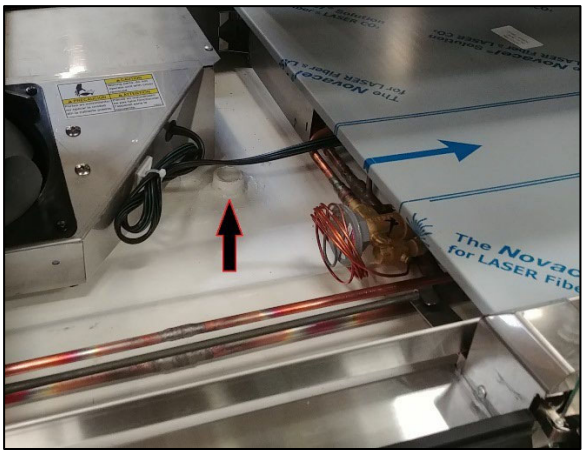

Figure 3: Provided case drop to route hoses and nozzle heater wiring.

2. FOGGER NOZZLE INSTALLATION

a. Heated nozzles must be utilized. Standard (non-heated) nozzles will freeze and render the system inoperable. The bracketry design will not accommodate non-heated nozzles.

b. Gain access to the coil area by removing the deck pans. The coils, fans and refrigeration piping will be exposed. Locate the nozzle mounting bracketry

c. Each fogger nozzle will mist a 3’ or 4’ section of the case. The nozzles will be mounted under the rear discharge air grills.

Case Length	Number of Heated Nozzles	Location (see drawing below)
4	1	1
6	2	2, 3
8	2	2, 3
12	3	2, 3, 5

Figure 6: Remove indicated screws and remove close off and mount nozzles.

Figure 5: Pre-installed brackets shown with nozzles installed. The required bracketry will be factory installed.

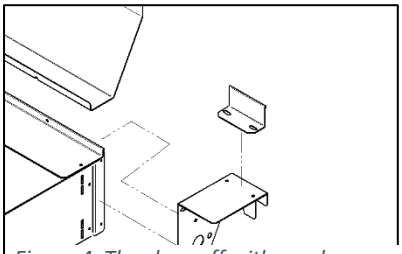

Figure 4: The close off with nozzle brackets.

See the table above for case length vs nozzle locations.

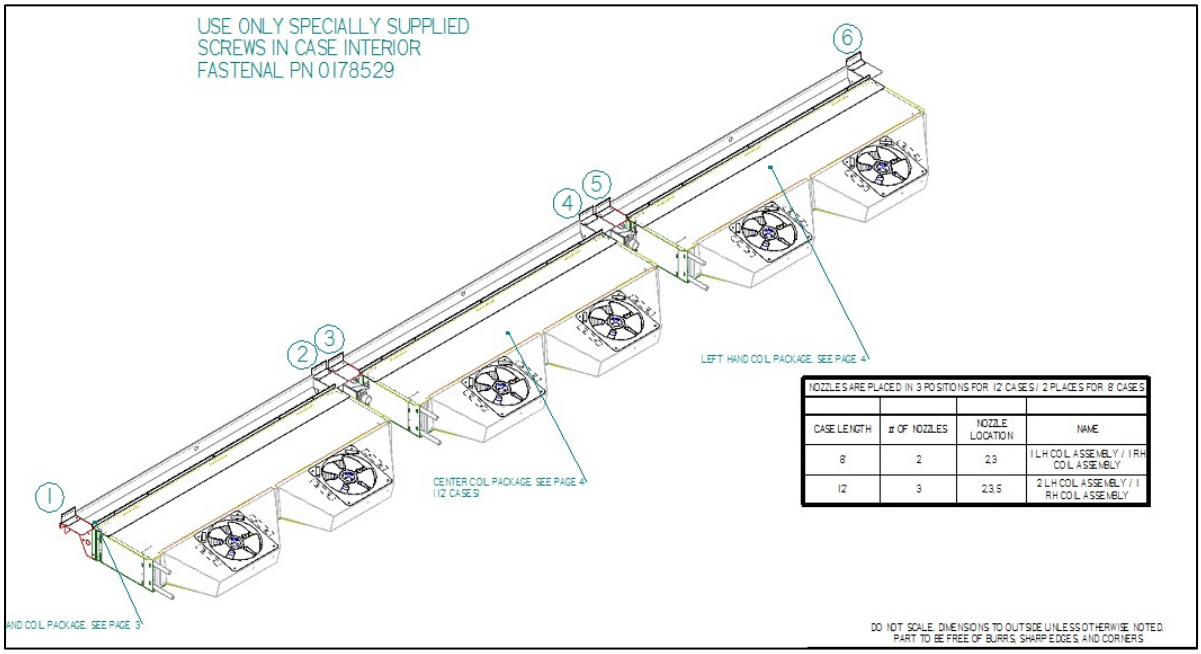

3. WATER AND AIR HOSE ROUTING

a. Trim the black hard plastic tubing (see figure 6, pg 3) surrounding the 3 lines coming out of each heated nozzle, ahead of the case drop (figure 4, pg 2). Do not pass the hard plastic through the case drop.

b. Pass the nozzle tubes and wiring through the case drop and ensure no excess tubing remains in the case. Leave enough slack so that the tubes do not kink when passing through the drop and nozzle service can be accomplished.

c. IMPORTANT! - Ensure that the water lines DO NOT COME IN CONTACT with the copper refrigeration lines.

d. Make the appropriate water and air connections to the fogger system under the case.

e. Make the appropriate electrical connections for the nozzle heaters. Plug the heaters into the provided GFCI labeled "HEATERS". Do not plug it into the "FOGGING SYSTEM" GFCI. *Note: The heater GFCI is electrically hot once the case electrical connections are made, therefore the nozzles will be heated once the heater is plugged in.*

f. IMPORTANT! - Seal case drop with a silicone based sealant once installation is finalized. Allow the recommended time to cure before first operation of the fogging system.

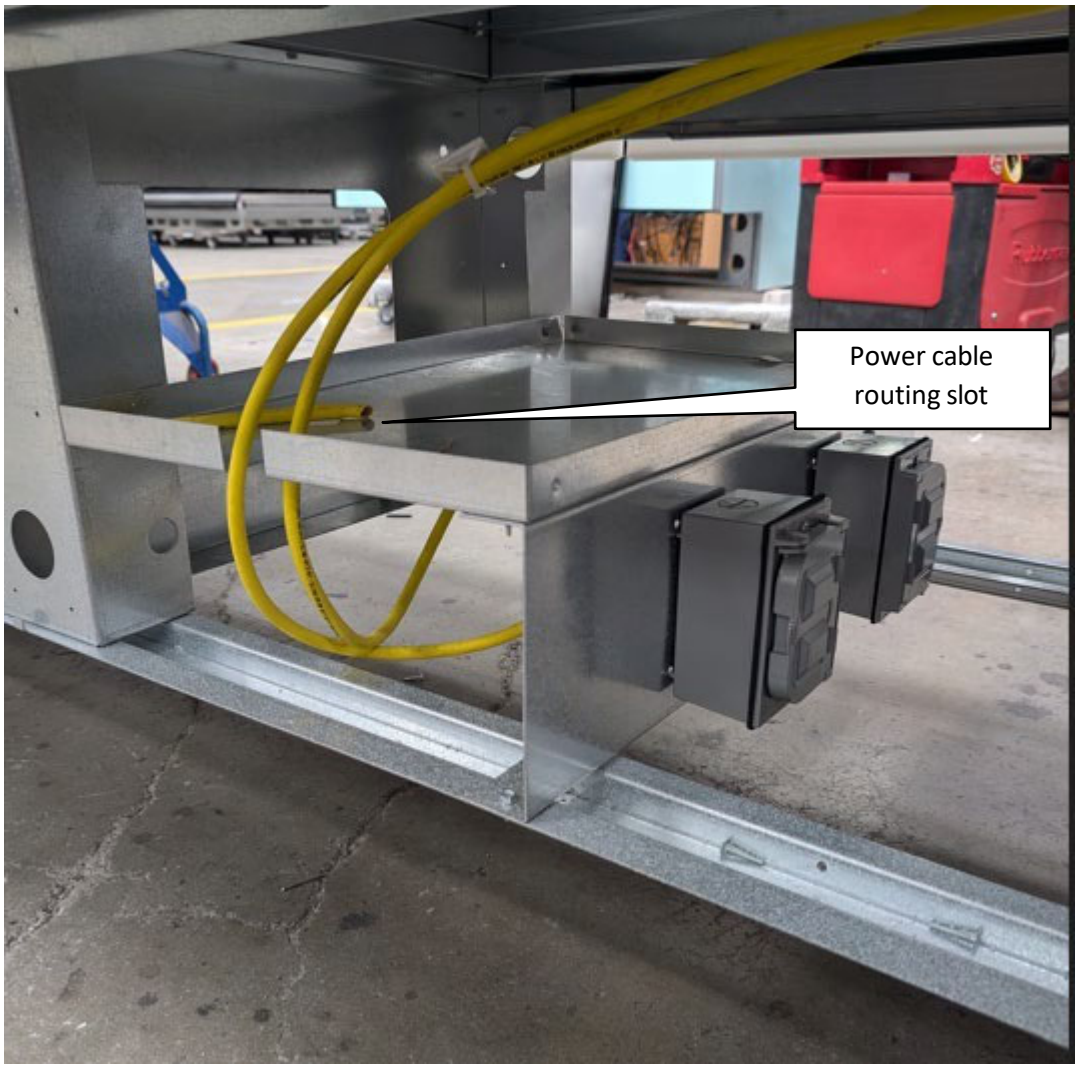

Figure 7: Do not plug the heater into the Fogging System GFCI and vice versa. Route power cables for the Miatech control box and nozzle heater thru the provided slot

4. CASE SETTINGS

a. Defrost – **IMPORTANT! – THE SUPPLIED CASE CONTROLLER WILL CONTROL DEFROST AND IS PROGRAMMED AT THE FACTORY WITH THE SETTINGS BELOW.** <u>This case does not need a defrost from the rack.</u> A rack defrost will lead to erratic operation and potential loss of product.
   i. Danfoss controller defrost frequency (d03): 8 hours
   ii. Danfoss controller defrost duration (d04): 30 minutes

b. Controller setpoints are as follows:
   i. Setpoint (cutout): 35°
   ii. Differential (r01): 1°

c. Discharge air (for reference)
   i. 30-32° (in type M ambient conditions 68° DB, 50% Rh) measured 2 hours after defrost. Will vary depending on time of measurement and actual store conditions.

d. Superheat
   i. Target 3-5° for superheat.

e. Evaporator suction temp
   i. **IMPORTANT! - 24°**. Lower temps may precipitate freeze-up of the fogger system and degradation of case performance. Higher temps may jeopardize product temperatures.

NOTE: You may notice that the controller setpoint is higher than the specified discharge air temp. This is because the controller air sensor has been placed in the return air stream under the deck pans. This was done because the fogger spray into the discharge air confused the controller and led to erratic operation.

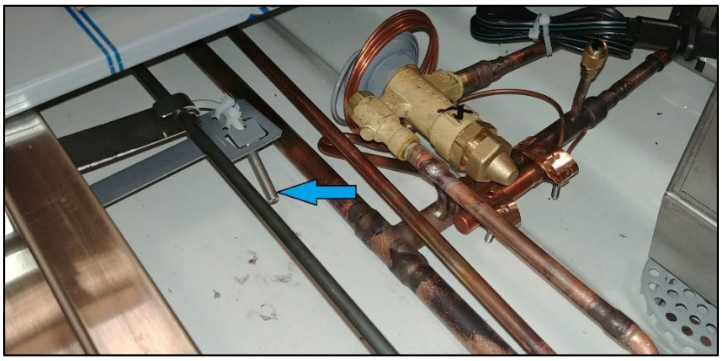

Figure 8: Air probe for controller setpoint located in return air stream on the primary case only.

5. IMPORTANT! - MIATECH AQUA FOGGER CONTROLLER SETTINGS:

a. Power switch: On
b. Water pressure: 5 psi
c. Mist time: 45 seconds
d. Off time: 3 minutes
e. Heaters plugged into proper GFCI socket (labeled at HEATERS)

6. REVERSE OSMOSIS FILTER

Total dissolved solids to be less than 100 PPM.

7. FIELD ELECTRICAL CONNECTIONS

a. **IMPORTANT! -** For primary/secondary case lineups; the secondary case does not have controls for the suction solenoid or defrost air heater. Two sets of leads will be bundled in both cases for a field connection when the cases are placed and bolted together. Trim excess wiring and make the indicated electrical connections for the solenoid and return air heater as per below:

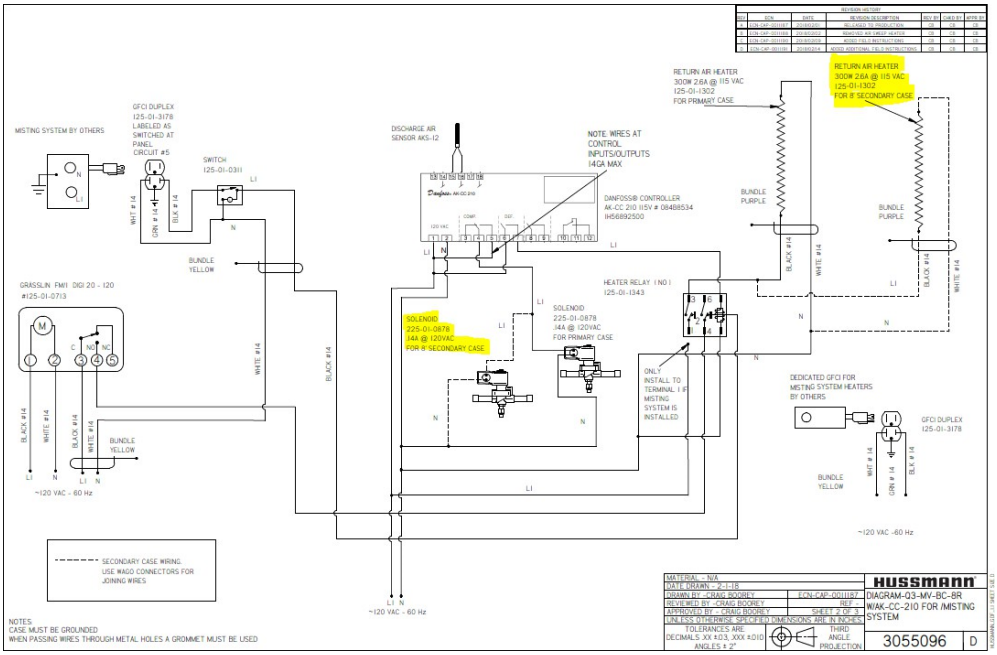

Figure 9: The dotted lines indicate the secondary solenoid and secondary return air heater.

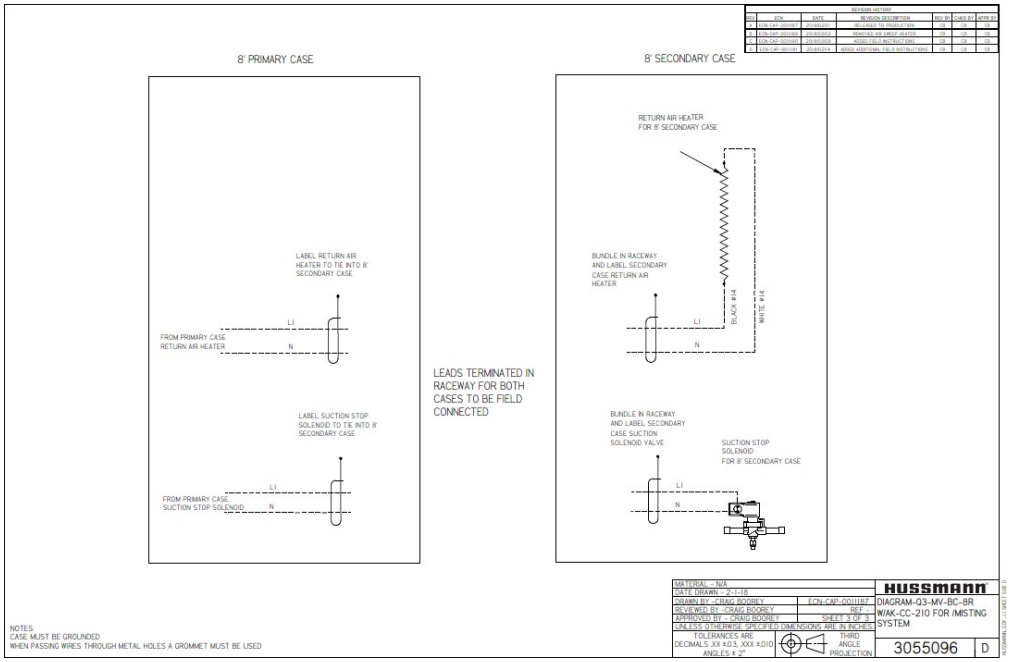

Figure 10: Locate the 2 sets of leads in the rear raceway of both cases after case placement. Connect the secondary case solenoid leads to the leads for the solenoid on the primary case. Do the same for the return air heater.

b. IMPORTANT! - Heater relay connection: The return air heater ships from the factory disabled. If a fogging system is installed, the return air heater must be connected. The lead will be labeled as "Install to terminal 1 if fogging system is installed."

i. The relay is located behind the rear panel of the primary case (green arrow).
ii. Make the connection of the unconnected wire to terminal 1 on the heater relay.

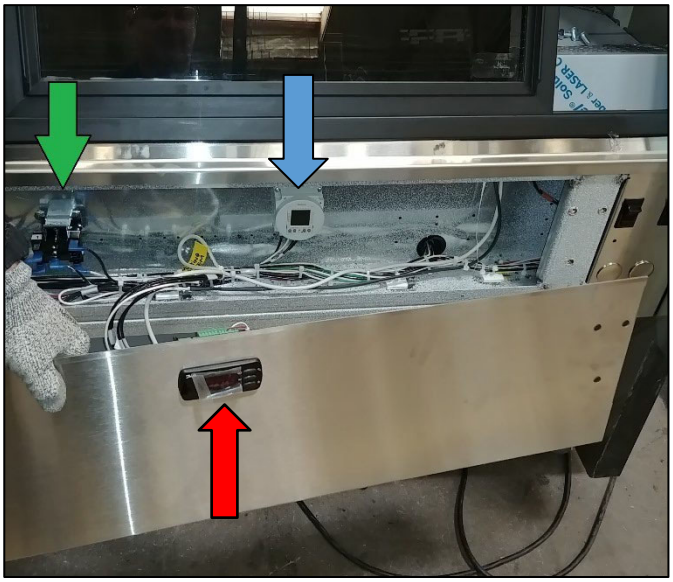

Figure 12: Green arrow is the Heater relay. Blue arrow is the Time Clock. Red arrow is the Danfoss controller.

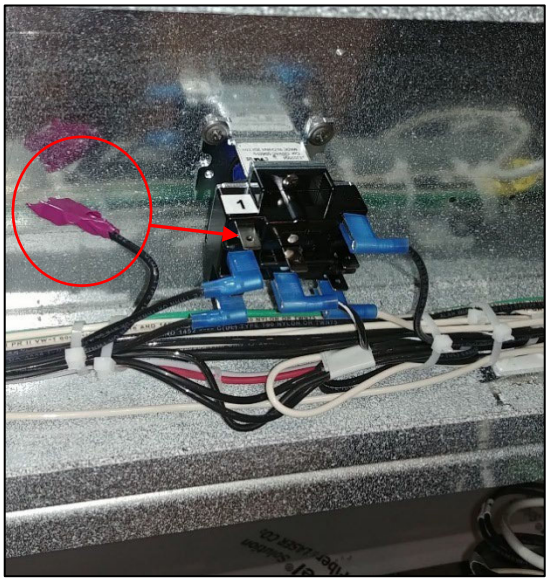

Figure 11: Connect the unconnected lead (purple) to terminal 1 on the heater relay.

- *NOTE: The rocker switch for the fogger system is lighted. Press the lighted part of the switch to turn the system on. If the light does not turn on when the switch turned on, one or more of the conditions for fogging engagement is not met.* ***<u>The following conditions will interrupt fogger operation</u>****:*

  - *…the Grasslin Time Clock (blue arrow above) is in off mode. This would be indicated by an open circle. In figure 14, the program is engaged indicated by a closed circle.*
  - *…the Danfoss controller is in defrost and the heater relay is energized. An icicle with rain falling (below) will be indicated on the Danfoss controller. The main display will show* ***"- d -".***

When the circle is filled, as in figure 14, the timer is in the on mode and the fogger power is not interrupted by the time clock.

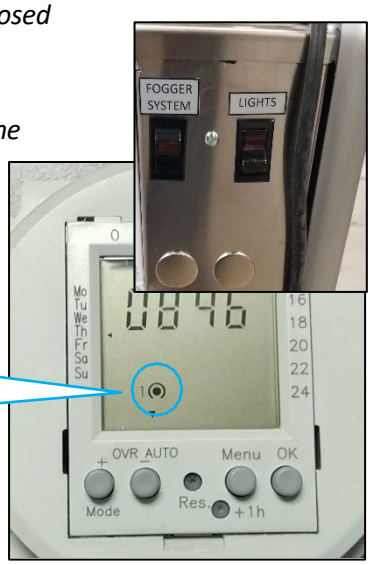

Figure 13

8. **SYSTEM CLOCK:** The Fogging system has a clock located behind the rear raceway panel.
   THE CLOCK MUST BE SET FOR THE STORE HOURS!
   THE MISTING SYSTEM CANNOT OPERATE
   CONTINOUSLY 24 HOURS OR ICING WILL OCCUR.

Figure 15: The system clock interrupts the fogging system during non-display hours.

Figure 14: Grasslin FM1D20-120 programmable time clock to match store's meat department display times with an overlap.

The Clock needs to be set such that it is ON only during open hours.

The benefits of interrupting the fogger system are:

- The RO filter life will be extended
- Any ice build-up will be cleared by this interruption.
- The life of the case will be extended by reducing the total fogging time.

It is not recommended that product remain in the case overnight. The product should be covered, removed to cold storage and re-stocked in the morning. However, if product is kept in the case, product will need to be wrapped to prevent drying during the misting system overnight off time.

IMPORTANT! Check with the store personal to understand if they will be removing product for night-time storage and if so, what are their display times. If the factory default fogging times and/or the local time differ, the clock **must** be re-programmed.

- Basic quick instructions below. See Grasslin's website for the full manual for model FM1D20-120U.

https://www.graesslin.de/-/media/inriver/7272-8754.ashx/Timer-Instructions-EN

a. Make the case electrical connections to power time clock. A circle ¾ circle with a "1" will be displayed when AC power is applied to the case. Confirm that the timer is in "AUTO" mode. This will be indicated with a small arrow above the "AUTO".
b. Adjust the time to match the current time by pressing the "Menu" button. Adjust up and down with "+" and "-" keys. Press the "OK" key to confirm the item and cycle to the next entry.
c. After the day of the week is set, the next step is to set the fogging time: "prog 1". Change the fogger start time for the morning as per the store's display time. Continue to enter the evening turn-off time. Once complete press the "Menu" button to exit programming.
d. The "OVR" button can be used to either turn off or turn on the fogger depending on its current state.
e. To permanently run the fogging system, the time clock will need to be reprogrammed to run 23 hours and 59 minutes. You will notice all of the hash marks from 0-24 are on.

DISCHARGE AIR GRILLS: The discharge grills are positional. The center grills all have the same outlet pattern. The case ends (defined as bordering a case end panel) will have a slightly more open pattern. Ensure that the grills are located in the correct positions:

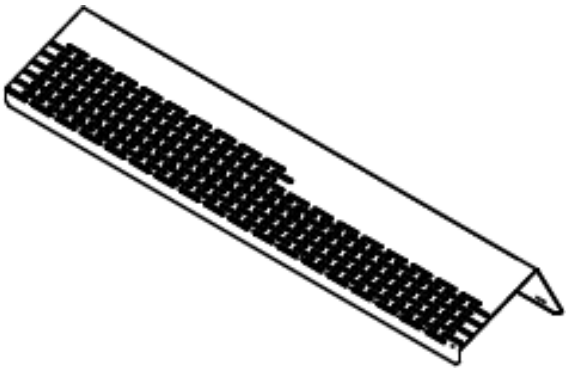

PN 3052446. Left hand grill as viewed from the front of the case. 1 per case or line-up.

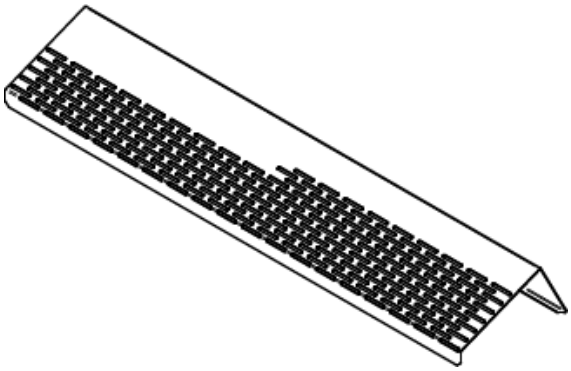

PN 3052447. Right hand grill as viewed from the front of the case. 1 per case or line-up.

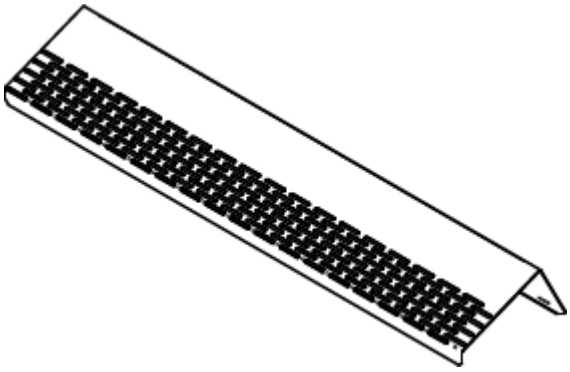

PN 3052448. Center grill. In all positions except ends. See above.

PROCEDURE AND CHECKLIST:

Hussmann / Installer Responsibility

- ☐ Make the heater relay connection at terminal 1 (pg 8).
- ☐ If applicable, make the appropriate primary to secondary case electrical connections for the return air heater and suction solenoid. See page 6 for details.
- ☐ Set suction pressure to a 24° equivalent. Ensure stable temperature.
- ☐ Ensure the TXV superheats are within specs.
- ☐ Ensure the controller settings are per the specs for setpoint, differential and defrost (see pg 5).
- ☐ Confirm discharge air setting meets the specification. Adjust the setpoint if needed.
- ☐ Ensure the discharge air grills are properly positioned inside the case and/or line-up. See the previous page for details.

Miatech Responsibility

- ☐ Remove rear skirt and slide the fogger system into the tray located under the case.
- ☐ Mount the heated nozzles into designed position under the discharge air grill.
- ☐ Route the water, air and heater wires through the provided case drop.
- ☐ Connect the water and air lines to the fogger system. Be sure an appropriate amount of slack is available to service the nozzles. The water lines must not contact the cold suction refrigeration lines. Freezing could occur and the system will be inoperable.
- ☐ Remove the case rear panel with the case controller to gain access to the rear raceway (pg 7).
- ☐ Ensure that the provided time clock (pg. 7-8) is set to local time. The factory default is CST.
- ☐ Ensure that the provided time clock (pg. 7-8) is programmed to the store's display hours. The factory default is 10pm – 6am system off time. Check with the store's personnel to understand if the case product will be unloaded and loaded, and if so, at what times. Adjust the time clock accordingly. If the case is to remain loaded overnight, the product will need to be wrapped.
- ☐ Plug the fogger system into the switched GFCI socket marked "Fogger System" (see pg 4).
- ☐ Plug the nozzle heater(s) into the GFCI marked "Fogger Heater System" (see pg 4).
- ☐ Turn the fogger system on with the rocker switch mounted on the case control panel. The rocker switch light should illuminate. If it does not, see page 7.
- ☐ Adjust the fogger system to the settings on page 5.
- ☐ Observe for proper operation with the discharge grills removed. Observe spray pattern. The nozzle spray pattern should shoot into the crumb tray parallel to the bend lines of the crumb tray.
- ☐ Test the RO filter and ensure the proper reduction of TDS between the inlet vs outlet of the RO system.
- ☐ Seal the case through-hole for the air and water lines.
- ☐ Reassemble deck pans, rear skirt, and rear panel.
- ☐ Ensure the discharge air grills are properly positioned inside the case and/or line-up. See the previous page for details.

FOGGER SYSTEM TROUBLESHOOTING

Problem	Possible Cause	Possible Solution
Little to No Fog	No Power to Fogging system	Ensure the power switch on Miatech unit turned to "ON".
		Ensure the "Fogger System" switch on the case is switched to the "ON" position, and the light is illuminated.
		GFCI on power outlet tripped; reset GFCI via the "RESET" button. GFCIs have a small green LED. Verify LED is green.
		Ensure the case has power supplied to it.
		The Fogger time clock is on the nighttime OFF cycle
	Case in defrost cycle	Wait until defrost cycle has completed. If the case is in defrost, the characters -d- will be displayed on the controller.
	Fogging system is on the "Off" time	The Fogging system will be powered down during off hours. Off hours are determined by the Fogging system timer. See the IO manual or SOP to adjust or override.
	Ice on discharge air grill	Check that discharge air temperatures are between 31°-32°F.
		Ensure defrost heater is operating during defrost.
		Ensure that case controller setpoint have not deviated from the factory settings. Refer to the specification sheet.
	Pinched Air/ Water lines	Ensure all lines leading to the nozzles are free of kinks or anything that may compress or cause a blockage of the line.
	Iced Nozzle	Ensure the heaters are plugged into the correct GFCI at all times.
		Ensure the GFCI is not tripped.
		Ensure the green LED on the nozzle is illuminated at all times.
		Call Miatech support 1-800-933-6478.
	Frozen water line(s)	Ensure that all water lines are not touching the refrigeration piping.
	Disconnected/punctured air or water line	Ensure all lines are intact, and water is not leaking from any lines or connections.
Too much fog/water build-up inside case	Miatech system ON time is too long.	Decrease ON-time.
	Miatech system OFF time is too short	Increase OFF-time.
	Too much water pressure	Decrease water pressure
Water spots	RO Filter is clogged or saturated	Have RO system serviced. Call Miatech support 1-800-933-6478.
Excessive noise	Too much air pressure	Miatech system needs service. Call Miatech support 1-800-933-6478.

Danfoss Controller

ENGINEERING TOMORROW

User Guide

Controller for temperature control
AK-CC 210

ADAP-KOOL® Refrigeration control systems

① Open Camera

② IPhone User
Hold the camera up to the QR code

Android User
Open QR Code Reader app if necessary.
Hold the camera up to the QR code

③ Tap the notification to be taken to the destination of the QR code

Dixell Controller

026-1210 Rev 3 03-FEB-2015

XR75CX Digital Controller for Medium-Low Temperature Refrigeration Applications Installation and Operation Manual

① Open Camera

② IPhone User
Hold the camera up to the QR code

Android User
Open QR Code Reader app if necessary.
Hold the camera up to the QR code

③ Tap the notification to be taken to the destination of the QR code

User Information

Start Up

See the merchandisers Data Sheet Set for refrigerant settings and defrost requirements. Bring merchandisers down to the operating temperatures listed on the Data Sheet.

⚠ WARNING

--LOCK OUT/ TAG OUT--

To avoid serious injury or death from electrical shock, always disconnect the electrical power at the main disconnect when servicing or replacing any electrical component. This includes, but is not limited to, such items as doors, lights, fans, heaters, and thermostats.

Load Limit

Each Merchandiser has a Load Limit. Shelf life of perishables will shorten if Load Limit is violated.

AT NO TIME SHOULD THE MERCHANDISER BE STOCKED BEYOND THE LOAD LIMITS INDICATED.

DO NOT BLOCK HONEYCOMB OR AIR RETURN GRILLE.

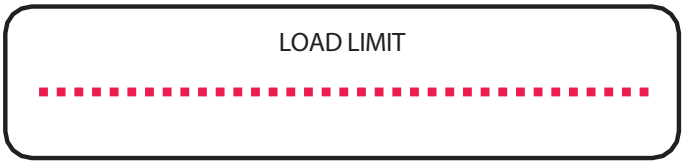

DO NOT OVERSTOCK MERCHANDISER

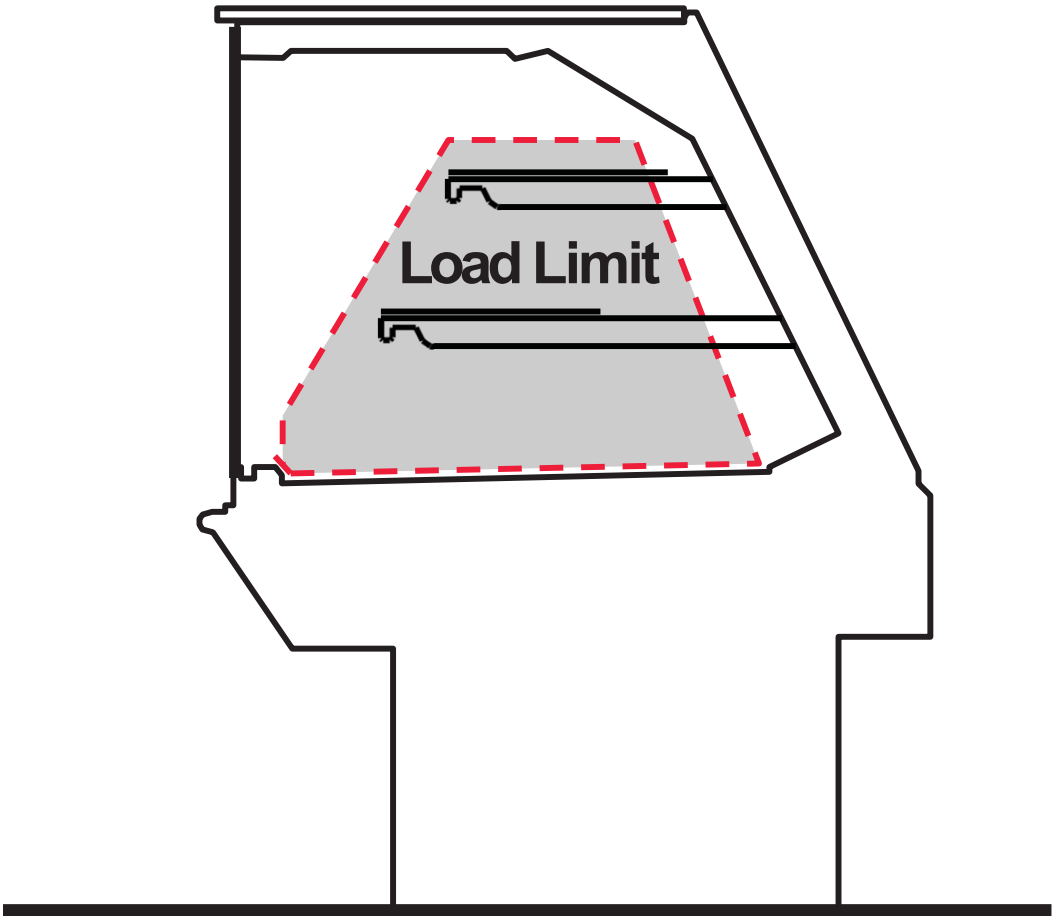

User Information Cont'd

Important Information

The Q3-MV-BC service cases are easy to work, attractive merchandising display cases capable of maintaining superb product quality, with the installation of the proper controlling devices. These should be set according to Hussmann's specifications and combined with a properly maintained fogging system hich will result in product life mitigated from dehydration, shrinkage and discoloration. Below are a few guidelines to ensure optimum performance and product life.

- Review the Case Spec Sheet and verify thermostat settings. Do not set temperature too cold, as this causes product dehydration.
- Temperatures should be achieved by digital thermostat and suction solenoid at each case. Do not use EPR valves, liquid line solenoids or electronic control devices of any kind without consulting Hussmann or Miatech specialist first. These controls allow temperature swings causing product dehydration and excessive energy consumption.
- Defrost is controlled by the provided Danfoss AK-CC 210 controller. See spec sheet for derost frequency and duration.
- Clean Fogging System, see Standard Operating Procedure or reference proper system operation manual.
- Work and rotate product - not to exceed a (4) hour period.
- At night turn off case lights and cover product with moistened cheesecloth or fabric towels.
- Keep meat holding box at 32°.
- Keep meat prep room refrigerated at 55°.
- Meat bloom box (if applicable) should be at 36°.
- Meat must enter case at 35° or below. Product deterioration is very rapid above 40°.
- Maintain sanitary conditions throughout the meat holding, prep and working areas.
- Do not display product outside the load limits.
- Turn and rotate the meat. The blood which gives the pink color works down in time which causes surface discoloration and dehydration. When turned before this condition occurs the side is kept in good color (bloom) condition. The meat can even be turned (3) three and (4) four times.
- Cold coils remove heat and moisture from the case and deposit it as frost on the coil. Thus a defrost is required to remove this frost. Fogging system adds moisture to the case and helps slow down the dehydration process. The only other moisture in the case is the product. A single level of meat in a case will dry out faster than a fully loaded case with two to four levels of meat.
- The colder the case, the faster the product loses its moisture and shelf life. It is very important to maintain a constant even product temp (see Case Spec Sheet)

⚠ WARNING

Retighten glass along hinges after leveling and first time case is brought to full operating temperature!

Re-Adjustment after initial startup

In addition to verifying that the hinges for the front glass are tightened when the case is delivered, recheck the hinges on the front glass once the case has been brought to full operating temperature.

Temperature can affect shapes and sizes of materials involved and can cause changes in the secure fit of the front glass and hinges.

User Information Cont'd

Removing Deck Pans

Always use caution while removing deck pans from merchandiser. Located below the deck pans is a heating element to assist in the deforst process. Due to the increased moisture from the Fogging system, frost build up must be defrosted by the heating element creating a HOT SPOT near the front of the deck pan which if not careful could lead to injury from heating element. The heating element will only run during defrost but HOT SPOT will remain for some time after defrost has completed. As a safe measure always use protective equipment to remove deck pans.

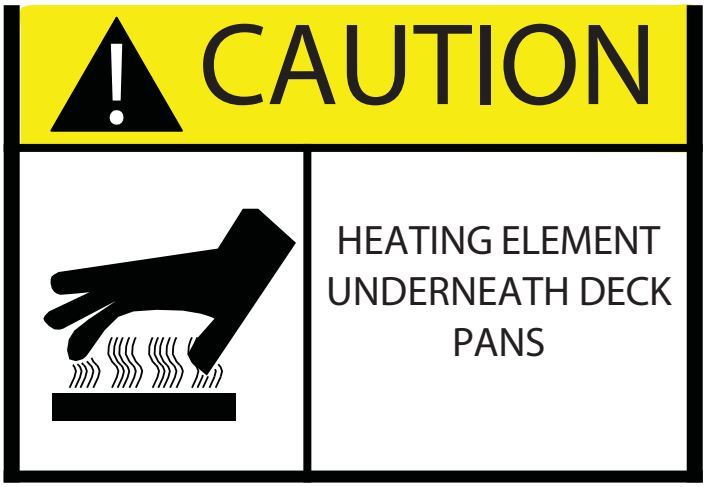

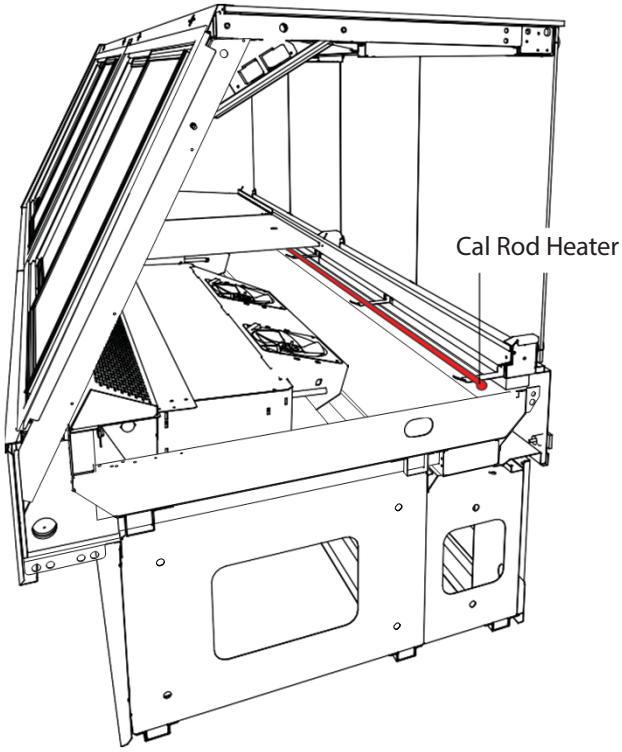

User Information Cont'd

Case Cleaning

Long life and satisfactory performance of any equipment are dependent upon the care it receives. To insure long life, proper sanitation and minimum maintenance costs, the merchandiser should be thoroughly cleaned, all debris removed and interiors washed down, weekly.

⚠ WARNING

TO PREVENT INJURY ALWAYS SHUT OFF POWER DURING CLEANING PROCESS.

Exterior Surfaces

The exterior surfaces must be cleaned with a mild detergent and warm water to protect and maintain their attractive finish. NEVER USE ABRASIVE CLEANSERS OR SCOURING PADS.

⚠ WARNING

Glass can cause bodily damage. Check support hinges for periodic maintenance. When glass is open, it can cause bodily damage, take adequate safety measures to protect shoppers.

Cleaning Bumpers

Clean Bumpers with household spray cleaners.

Cleaning Under Merchandiser

Remove lower body panels. Use a vacuum with a long wand attachment to remove accumulated dust and debris from under the merchandiser.

Cleaning Stainless Steel Surfaces

Use non abrasive cleaning materials, and always polish with grain of steel. Use warm water or add a mild detergent to the water and apply with a cloth. Always wipe dry after wetting.

Use alkaline chlorinated or non-chlorine containing cleaners such as window cleaners and mild detergents. Do not use cleaners containing salts as this may cause pitting and rusting of the stainless steel finish. Do not use bleach.

Clean frequently to avoid build-up of hard, stubborn stains. A stainless steel cleaning solution may be used periodically to minimize scratching and remove stains.

Rinse and wipe dry immediately after cleaning. Never use hydrochloric acid (muriatic acid) on stainless steel.

Interior Surfaces

The interior surfaces may be cleaned with most domestic detergents, ammonia based cleaners and sanitizing solutions with no harm to the surface.

Cleaning Coils

NEVER USE SHARP OBJECTS AROUND COILS. Use a soft brush or vacuum brush to clean debris from coils. Do not puncture Coils! Do not bend fins. Contact an authorized service technician if a coil is punctured, cracked, or otherwise damaged.

ICE in or on the coil indicates the refrigeration and defrost cycle is not operating properly. Contact an authorized Service Technician to determine the cause of icing and to make proper adjustments as necessary. To maintain product integrity, if not done so already, move all product to a cooler until the merchandiser has returned to normal operating temperatures.

User Information Cont'd

Do Not Use:

- Abrasive cleaners and scouring pads, as these will mar the finish.
- A hose on lighted shelves or submerge shelves in water.
- Solvent, oil or acidic based cleaners on any interior surfaces.
- A hose on LED Lights or any other electrical component.

Do:

- Remove the product and all loose debris to avoid clogging the waste outlet.
- Store product in a refrigerated area such as a cooler during the cleaning process. Remove only as much product as can be taken to the cooler in a timely manner.
- **First Turn off Refrigeration, then disconnect electrical power to merchandiser.**
- Thoroughly clean all surfaces with soap and hot water. Do not use steam or high pressure water hoses to wash the interior. These will destroy the merchandisers' sealing causing leaks and poor performance.
- Ensure to minimize direct contact between fan motors and cleaning or rinse water.
- Rinse with hot water, but DO NOT flood. Never introduce water faster than the waste outlet can drain.
- Allow merchandiser to completely dry before resuming operation.
- LED lights are magnetized to each shelf and can be removed easily for any shelf cleaning.
- After cleaning has been completed, remember to restore power back to merchandiser.

⚠ WARNING

Product will be degrade and may spoil if allowed to sit in non-refrigerated area.

Troubleshooting

Problem	Possible Cause	Possible Solution
Case temperature is too warm.	Ambient conditions may be affecting the case operation.	Check case position in store. Is the case located near an open door, window, electric fan or air conditioning vent that may cause air currents? Case must be located minimum 15 Ft away from doors or windows. Cases are designed to operate at 55% Relative humidity and a temperature of 75°F.
	Discharge air temp is out of spec.	Check evaporator fan operation. Check electrical connections and input voltage.
		Fans are installed backwards. Check airflow direction.
		Fan blades are installed incorrectly. Make sure fan blades have correct pitch and are per specification.
		Check to see that fan plenum is installed correctly. It should not have any gaps.
		Check suction pressure and insure that it meets factory specifications.
	Case is in defrost.	Check defrost settings. See Technical Specifications section.
	Product load may be over its limits blocking airflow.	Redistribute product so it does not exceed load level. There is a sticker on the inside of the case indicating what the maximum load line is.
	Coil is freezing over.	Return air is blocked, make sure debris is not blocking the intake section.
		Coil close-offs are not installed. Inspect coil to make sure these parts are on the case.
	Condensing coil or evaporator coil is clogged or dirty.	Clean coil.
Case temperature is too cold.	The t-stat temp is set too low.	Check settings. See Technical Specifications section.
	Ambient conditions may be affecting the case operation.	Check case position in store. Is the case located near an open door, window, electric fan or air conditioning vent that may cause air currents? Case must be located minimum 15 Ft away from doors or windows. Cases are designed to operate at 55% Relative humidity and a temperature of 75°F.
Condensation on glass.	Ambient conditions may be affecting the case operation.	Check case position in store. Is the case located near an open door, window, electric fan or air conditioning vent that may cause air currents? Case must be located minimum 15 Ft away from doors or windows. Cases are designed to operate at 55% Relative humidity and a temperature of 75°F.
	Inadequate air circulation.	Check if air sweep fans are functioning, check electrical connections.
	There is not enough heat provided in the airflow.	Check if air sweep heater is functioning, check electrical connections.
	There are glass gaps on the side of the case.	See glass adjustment section.
	Glass is not completely shut.	Close glass correctly.

Troubleshooting Cont'd

Problem	Possible Cause	Possible Solution
Water has pooled under case.	Case drain is clogged.	Clear drain.
	PVC drains under case may have a leak.	Repair as needed.
	Case tub has unsealed opening.	Seal as needed.
	If the case is in a line-up, case to case joint is missing or unsealed.	Install case to case joint and seal as needed.
	Evaporator pan is overflowing (if applicable).	Check electrical connection to evaporator pan. Check float assembly, it should move freely up and down the support stem. Clear any debris.
Case is not draining properly.	Case is not level.	Level the case.
	Drain screen is plugged.	Clean drain screen and remove any debris.
	Drain or P-trap is clogged.	Clear any debris.
Frost or ice on evaporator coil.	Evaporator fans are not functioning.	Check electrical connections.
	Defrost clock is not functioning.	Case should be serviced by a qualified service technician.
	Coil is freezing over.	Return air is blocked, make sure debris is not blocking the intake section.
		Coil close-offs are not installed. Inspect coil to make sure these parts are on the case.
Lights do not come on.	Ballast/light socket wiring.	Check electrical connections. See Electrical Section and check wiring diagram.
	Ballast needs to be replaced.	Case should be serviced by a qualified service technician. See Electrical Section.
	Lamp socket needs to be replaced.	Case should be serviced by a qualified service technician.
	Lamp needs to be replaced.	See Maintenance Section.
	Light Switch needs to replaced.	Case should be serviced by a qualified service technician.

HUSSMANN®

To obtain warranty information or other support, contact your Hussmann representative. Please include the model and serial number of the product.

Hussmann Warranty / Technical Assistance
(800) 592-2060

Hussmann Corporation, Corporate Headquarters: Bridgeton, Missouri 63044 2014