SELF-SERVICE DELI / PRODUCT REVISION DATE 06/07/18

HUSSMANN - TY3-6 I-ISLAND, E-END, C-CENTER (CHINO)

DOE 2017 Energy Efficiency Compliant — Hussmann refrigerated merchandisers configured for sale for use in the United States meet or surpass the requirements of the DOE 2017 energy efficiency standards.

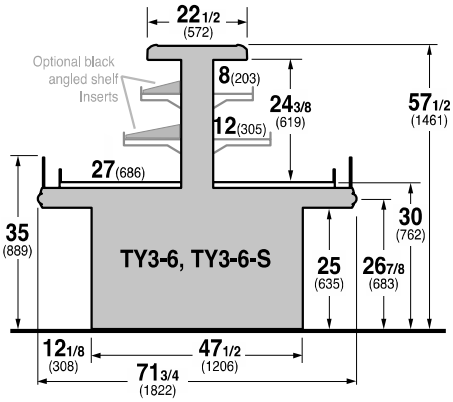

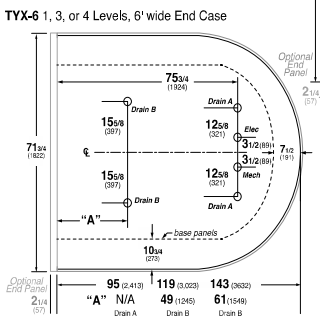

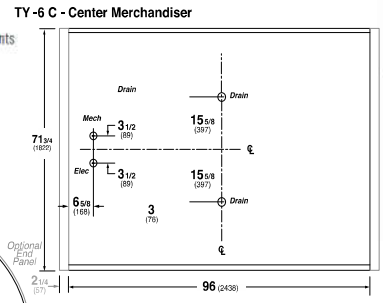

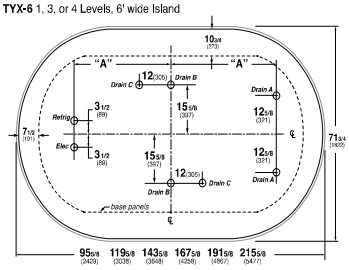

Note: *Stub up locations vary, please refer to Cadblock at Hussmann.com

REFRIGERATION DATA:

CASE LENGTHS	CASE USAGE	CAPACITY *** (BTU/HR/FT)		TEMPERATURE (ºF)			VELOCITY (FT/MIN)
		RATING CONDITION		EVAPORATOR		DISCHARGE AIR ** (°F)	
		NSF 7	AHRI 1200	NSF 7	AHRI 1200	NSF 7	NSF 7
8I, 10I, 12I, 14I, 16I, 18I	DELI	1650	1340	20	28	28~30	100~150
8I, 10I, 12I, 14I, 16I, 18I	PRODUCE*	N/A	1340	N/A	28	N/A	100~150
8E, 10E, 12E	DELI	1570	1340	20	28	28~30	100~150

CASE LENGTHS	EST. REFG. CHRG. 404a (LBS)	GLYCOL (20°F INLET, 6° RISE	
		GPM	PSI
8I	1.1	4.7	6.6
10I	1.3	5.8	4.6
12I	1.8	6.9	6.2
14I	2.2	7.9	7.9
16I	2.7	8.9	5.5
18I	3.1	9.9	6.3
8E	1.3	4.1	3.3
10E	1.8	5.0	4.6
12E	2.2	6.0	6.1

***APPROVED FOR NON-CRITICAL TEMP PRODUCE ONLY**
****FRONT DISCHARGE AIR MEASURED INSIDE AIR CURTAIN HONEYCOMB**
*****REFRIGERATION NOTES:**

1) BTU'S ARE SHOWN WITHOUT LIGHTS.
2) ADD 10 BTU'S PER FOOT OF LED LIGHTS PER LIGHT MATRIX BELOW.
3) AHRI 1200 RATING POINT FOR ENERGY CONSUMPTION COMPARISON ONLY.
4) USE DEW POINT FOR HIGH GLIDE REFRIGERANTS. CARE SHOULD BE TAKEN TO USE THE DEW POINT IN P/T TABLES FOR MEASURING AND ADJUSTING SUPERHEAT. ADJUST EVAPORATOR PRESSURE AS NEEDED TO MAINTAIN THE DISCHARGE AIR TEMPERATURE SHOWN.
5) RATING CONDITION IS NSF TYPE I, 75°F/55% RH.

REFRIGERATION DATA CONTINUED:

ELEC. THERMOSTAT / AIR SENSOR SETTINGS			DEFROST TYPE	TIME (MIN)	DEFROST FREQUENCY (#/DAY)	TERM. TEMP (°F) COIL ONLY	DRIP TIME	DEFROST WATER (LBS/DAY/FT)
USAGE	CUT IN (ºF)	CUT OUT (ºF)						
DELI	30	26	OFF TIME	16	12	52	N/A	15.8
PRODUCE	38	34	OFF TIME	16	12	52	N/A	15.8

END PANEL WIDTH KEY		
# OF END PNLS	END PNL WIDTH (IN.)	TOTAL ADDED LENGTH (IN.)
1	1.125	1.125
2	1.125	2.25

ELECTRICAL DATA:

STANDARD FANS, HEATERS, LED LIGHTS (115 VOLT)

CASE LENGTH	EVAPORATOR FANS					CANOPY LIGHTS LED		OPTIONAL LED SHELF LIGHTS		MAX. LED LOAD (W/ ALL OPTIONS)		ANTI-SWEAT HEATERS (ON FAN CIRCUIT)		CONVENIENCE OUTLETS (OPTIONAL)			LIGHT MATRIX
	# OF EVAP FANS	BLADE DIA. (IN.)	BLADE PITCH (°)	AMPS	WATTS	AMPS	WATTS	AMPS	WATTS	AMPS	WATTS	AMPS	WATTS	# OUTLETS	VOLTS	AMPS	FT OF LEDS
8I	6	8	15	1.8	48	0.1	14	0.3	37	0.4	52	0.4	50	1	115	15	22
10I	8	8	15	2.4	64	0.2	25	0.5	59	0.7	84	0.6	70	1	115	15	36
12I	10	8	15	3.0	80	0.3	35	0.7	79	1.0	113	0.8	90	1	115	15	46
14I	12	8	10	3.6	216	0.4	46	0.9	100	1.3	146	1.0	110	1	115	15	58
16I	14	8	10	4.2	252	0.5	56	1.1	122	1.5	178	1.0	120	1	115	15	70
18I	16	8	10	4.8	288	0.6	65	1.2	139	1.8	205	1.2	140	1	115	15	82
8E	6	8	15	1.8	48	0.2	28	0.5	56	0.7	85	0.3	40	1	115	15	33
10E	8	8	15	2.4	64	0.3	38	0.7	77	1.0	115	0.3	40	1	115	15	45
12E	10	8	15	3.0	80	0.3	33	0.8	98	1.1	130	1.0	110	1	115	15	57

OPTIONAL HIGH OUTPUT LED LIGHTS (115 VOLT)

CASE LENGTH	CANOPY LIGHTS H.O. LED		OPTIONAL SHELF		MAX. H.O. LED LOAD	
	AMPS	WATTS	AMPS	WATTS	AMPS	WATTS
8I	N/A	N/A	N/A	N/A	N/A	N/A
10I	N/A	N/A	N/A	N/A	N/A	N/A
12I	N/A	N/A	N/A	N/A	N/A	N/A
14I	N/A	N/A	N/A	N/A	N/A	N/A
16I	N/A	N/A	N/A	N/A	N/A	N/A
18I	N/A	N/A	N/A	N/A	N/A	N/A
8E	N/A	N/A	N/A	N/A	N/A	N/A
10E	N/A	N/A	N/A	N/A	N/A	N/A
12E	N/A	N/A	N/A	N/A	N/A	N/A