SELF-SERVICE DELI / PRODUCE REVISION DATE 10/09/19

HUSSMANN - TY3-6 I-SC (CHINO)

DOE 2017 Energy Efficiency Compliant Hussmann refrigerated merchandisers configured for sale for use in the United States meet or surpass the requirements of the DOE 2017 energy efficiency standards.

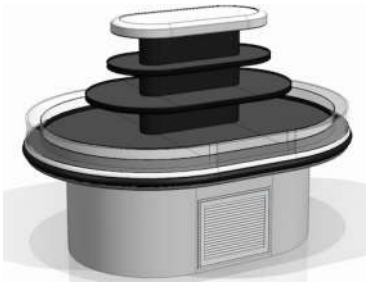

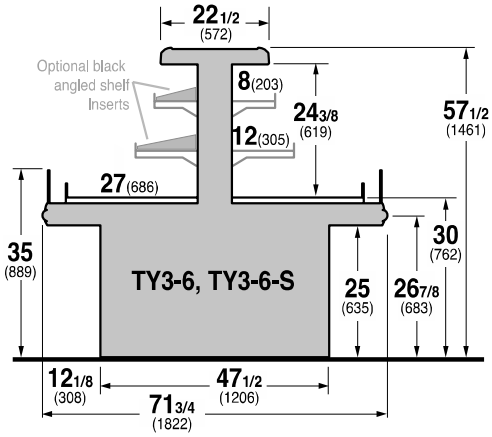

TYX-6 1, 3, or 4 Levels, 6' wide Island

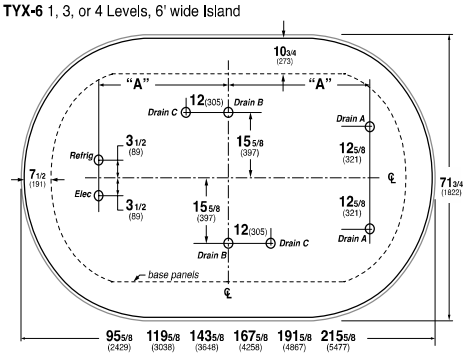

Note: *Stub up locations vary, please refer to Cadblock at Hussmann.com

REFRIGERATION DATA:

CASE LENGTHS	CASE USAGE	CONVENTIONAL CAPACITY ** (BTU/HR/FT)	AVG DISCHARGE AIR* (°F) (SEE SETPOINTS)	VELOCITY (FT/MIN)	DEFROST WATER (LBS/DAY/FT)
8I	SS DELI	1840	28~32	100~150	N/A
10I					N/A
12I					N/A

***FRONT DISCHARGE AIR MEASURED INSIDE AIR CURTAIN HONEYCOMB**

****REFRIGERATION NOTES:**

1) CAPACITY FOR REFERENCE ONLY.
2) USE DEW POINT FOR HIGH GLIDE REFRIGERANTS. CARE SHOULD BE TAKEN TO USE THE DEW POINT IN P/T TABLES FOR MEASURING AND ADJUSTING SUPERHEAT. ADJUST EVAPORATOR PRESSURE AS NEEDED TO MAINTAIN THE DISCHARGE AIR TEMPERATURE SHOWN.
3) RATING CONDITION IS NSF TYPE I, 75°F/55% RH

REFRIGERATION DATA CONTINUED:

CONTROLLER / AIR SENSOR SETTINGS			DEFROST TYPE	FAILSAFE TIME (MIN)	DEFROST FRE-QUENCY (#/DAY)	TERM. TEMP (°F) AIR	DRIP TIME (MIN)
USAGE	SET POINT (°F)	DIFFER-ENTIAL (°F)					
DELI	26	10	OFF TIME	50	6	52	NA

4) DEFROST IS BASED ON TERMINATION TEMP, WHICH UNDER NORMAL CIRCUMSTANCES, IS SHORTER THAN FAILSAFE TIME.

END PANEL WIDTH KEY		
# OF END PNLS	END PNL WIDTH (IN.)	TOTAL ADDED LENGTH (IN.)
1	1.125	1.125
2	1.125	2.25

ELECTRICAL DATA:

STANDARD FANS, HEATERS, LED LIGHTS (115 VOLT)

CASE LENGTH	EVAPORATOR FANS					CANOPY LIGHTS LED		OPTIONAL LED SHELF LIGHTS		MAX. LED LOAD (W/ ALL OPTIONS)		ANTI-SWEAT HEATERS		CONVENIENCE OUTLETS (OPTIONAL)			LIGHT MATRIX
	# OF EVAP FANS	BLADE DIA. (IN.)	BLADE PITCH (°)	AMPS	WATTS	AMPS	WATTS	AMPS	WATTS	AMPS	WATTS	AMPS	WATTS	# OUTLETS	VOLTS	AMPS	FT OF LEDS
8I	6	8	20	1.8	48	0.12	14	0.33	37	0.45	52	0.43	50	1	115	15	22
10I	8	8	15	2.4	64	0.22	25	0.51	59	0.73	84	0.61	70	1	115	15	36
12I	10	8	15	3.0	80	0.30	35	0.68	79	0.99	113	0.78	90	1	115	15	46

CONDENSING UNIT AND EVAPORATIVE PANS

CASE LENGTH	CONDENSING UNIT					EVAPORATIVE PAN			EST. REFG. CHRG. (LBS)
	NOM. HP	REFRIG.	Hz/Ph	VOLTS	RLA	VOLTS	AMPS	WATTS	
8I	2 1/4	R-404A	60 / 1	240	15.7	208	7.2	1500	1.1
10I	3		60 / 1	240	20.7	208	7.2	1500	1.3
12I	3 1/2		60 / 1	240	23.6	208	7.2	1500	1.8
8I	3	R-448A	60 / 1	240	18.0	208	7.2	1500	1.1
10I	3 1/4		60 / 1	240	23.3	208	7.2	1500	1.3
12I	3 1/2		60 / 1	240	23.6	208	7.2	1500	1.8

OPTIONAL HIGH OUTPUT LED LIGHTS (115 VOLT)

CASE LENGTH	CANOPY LIGHTS H.O. LED		OPTIONAL SHELF		MAX. H.O. LED LOAD	
	AMPS	WATTS	AMPS	WATTS	AMPS	WATTS
8I	N/A	N/A	N/A	N/A	N/A	N/A
10I	N/A	N/A	N/A	N/A	N/A	N/A
12I	N/A	N/A	N/A	N/A	N/A	N/A